INFINITE ENERGY™

The Magazine of New Energy Technology

New Energy • New Science • New Technology

Volume 9 • Issue 51 • 2003

Joseph Papp's Noble Gas Engine Rises

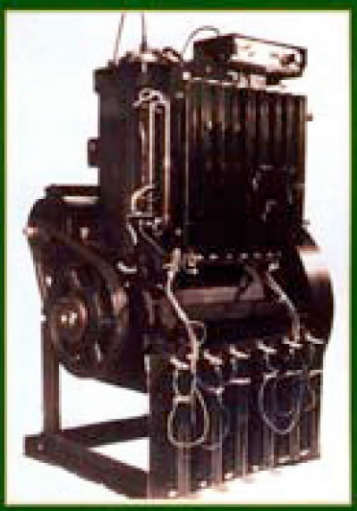

From the deadly engine explosion in 1968 that physicist Richard Feynman once disparaged to today's research showing that noble gases can explode mysteriously and drive pistons, the bizarre Papp Engine saga is revealed as never before. . .

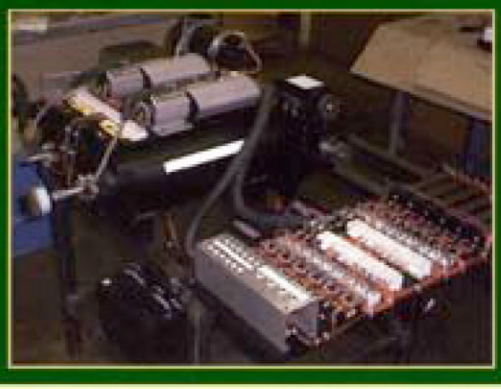

A 100 HP "Dream Engine" from the 1960s with a charge of noble gas fuel that might last months, with no exhaust and no cooling system, struggles to be recovered by scientists. Does Papp's "hoax" demonstrate the failure of modern physics – or is it "pathological science"?

51

0 74470 87813 1

$5.95 US • $7.95 Canada • £3.95 U.K.

New Energy Foundation, Inc. finds the

Egely Wheel Vitality Meter

to be a fascinating demonstration, but of what, we are not yet sure.
Solve the mystery for yourself, if you can.

"The Egely Wheel Vitality Meter can help to objectively measure your life energy level, develop your ability to concentrate, control your relaxation, learn to direct the energy flowing from your body, form a healthier and more successful lifestyle.

"The Egely Wheel has won numerous awards at International Exhibitions of Inventions, including gold medals in Pittsburgh and Sofia.

"Extensive control experiments have proven that the rotation of the wheel during measurements is not driven by heat convection, or electromagnetic energy. The inventor and designer, George Egely, Ph.D., is a scientist who was employed for many years by the Atomic Energy Research Institute of the Hungarian Academy of Sciences. He is an expert in the field of energy transport processes."

—G. Egely

Price includes postage and handling. Actual size 3" wide. Standard 9V battery required. Produced by Egely Research Co. Ltd.

Order from: New Energy Foundation, Inc.
P.O. Box 2816•Concord, NH 03302-2816
Phone: 603-485-4700•Fax: 603-485-4710
Website: www.infinite-energy.com

Paperback, 2002
316 pp.

Pushing Gravity:
New Perspectives on Le Sage's Theory of Gravitation

Edited by Matthew Edwards

$27.95 North America
$32.95 Foreign

New Energy Foundation, Inc.
P.O. Box 2816 • Concord, NH 03302-2816
Phone: 603-485-4700 • Fax: 603-485-4710

Electric Spacecraft Journal Network

Keeping you informed about independent research...

The ESJ Network assists individual research efforts, facilitates cooperation among experimenters and provides an open forum for the exchange of information and ideas.

The Network welcomes those engaged in experiments, analysis, conceptual thinking, and investigative research, who are willing to interact with others.

Inquiries to: 828-683-0313 or 828-683-1280, Fax: 828-683-3511;
Subscriptions: [quarterly] Electric Spacecraft Journal,
322 Sunlight Drive, Leicester, NC 28748 U.S.
www.electricspacecraft.com

Annual subscription rates: $26; Canada and Mexico $30; Overseas $40.

The *INFINITE* Light FLASHLIGHT

$19.95 North America
$24.95 Foreign

This brilliant, compact 9 volt powered, white LED illuminated light has four operating modes. It's the perfect light to keep next to your bed or store in the car; it will always tell you where it is! Modes include: *always on* (a fresh battery will keep it glowing for over 2 1/2 years), *low beam* (200 hours on this mode), *high beam* (20 hours on this mode, while a conventional AA powered light would run about 90 minutes), and *strobe* (200 hours on this mode, and the light can be seen for almost half a mile). Your light is supplied with a 9 volt alkaline battery. The special high brightness light emitting diode has no filament to jar loose and will last almost twelve years.

New Energy Foundation, Inc. • P.O. Box 2816 • Concord, NH 03302-2816
Phone: 603-485-4700 • Fax: 603-485-4710
Website: www.infinite-energy.com

New Energy Times Archive

INFINITE ENERGY™
The Magazine of New Energy Technology

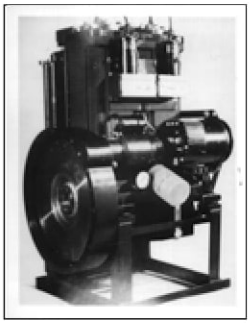

The Noble Gas Engine of Joseph Papp p. 6-50

Current Developments with the Noble Gas Engine p. 51-63

TABLE OF CONTENTS - ISSUE 51, SEPTEMBER/OCTOBER 2003

ARTICLES

6 The Mystery and Legacy of Joseph Papp's Noble Gas Engine *Eugene F. Mallove*

14 The Dream Machine: One Man Took Its Secret to the Grave. But the Little Engine That Could Change the World Continues to Fascinate—Or to Fool *David Ansley*

21 The Papp Patents

29 Mr. Papf's Perpetual-Motion Machine *Richard P. Feynman (from Internet)*

30 Blast Kills Bayan: Test Engine in Explosion *Dick Rosengarten and Jim Fendell*

31 Witness to the Papp Engine Explosion: An Interview with Cecil Baumgartner

49 A Revolutionary Engine That Operates for 15 Cents Per Hour Without Gasoline, Air, Combustion, or Exhaust May Be Near *Bob Said*

51 The Argon Engine Development Project: An Interview with Mark Hugo and Blair Jenness

55 The Tangled Saga of the Papp Engine: Attempts to Revive It *Heinz Klostermann*

59 "Lightning Harnessed": The Internal Plasma Expansion/Contraction Engine (IPECE) *Heinz Klostermann*

61 Contrast and Comparison Between the Papp Engine and the PAGD™/XS NRG™ Technologies *P.N. Correa and A.N. Correa*

64 Orgone Charged Photomultiplier Tubes *Thomas Nieborowski*

68 Long Time Weather Forecasting: Ladybirds, Magnetic Fields, and Electromagnetic Radiation *Ferenc Wernsdörfer*

DEPARTMENTS

4 Letters to the Editor

5 Breaking Through Editorial: ICCF10—A Message from the Front *Eugene F. Mallove*

70 Science and Technology Used Book Marketplace

71 Professional Service Directory

72 *Infinite Energy* Order Form

Cover design: Barbara DelloRusso. Photos courtesy of Mark Hugo, Heinz Klostermann, and Jim Sabori.

New Energy Times Archive

A Bimonthly Magazine of the New Energy Foundation

INFINITE ENERGY™

Volume 9, No. 51
September/October 2003

EDITOR-IN-CHIEF AND PUBLISHER
Eugene F. Mallove, Sc.D.

MANAGING EDITOR
Christy L. Frazier

EDITORIAL LAYOUT MANAGER
Joann L. Cheney

SCIENTIFIC ADVISORY BOARD

Dr. Harold Aspden, Southampton, UK
Dr. Robert W. Bass, Pahrump, Nevada, USA
Dr. John O'M. Bockris, Texas A&M University, USA (ret.)
Dr. Dennis Cravens, Cloudcroft, New Mexico, USA
Dr. Peter Glück, Inst. of Isotopic & Molecular Tech., Romania
Dr. Xing Zhong Li, Tsinghua University, Beijing, China
Dr. M. Srinivasan, Bhabha Atomic Research Center, India (ret.)
Dr. Edmund Storms, Los Alamos National Lab., USA (ret.)

Infinite Energy magazine (ISSN 1081-6372) is published six times per year by the non-profit New Energy Foundation, Inc., P.O. Box 2816, Concord, NH 03302-2816. Subscription price: $29.95 U.S., Canada and Mexico, $49.95 other foreign. Postmaster: Send address changes to *Infinite Energy*, P.O. Box 2816, Concord, NH 03302-2816.

Infinite Energy magazine presents science and technology, generally in the field of new energy. It provides a forum for debate and discussion of frontier science. *Infinite Energy* is open to all rationally stated points of view. The material presented here reflects the views of the authors, not necessarily those of *Infinite Energy*. *Infinite Energy* assumes no responsibility for individuals who reproduce potentially hazardous experiments contained in its pages.

Infinite Energy does not independently verify the content, citation, validity, or paternity of anything published herein by outside authors. Further, *Infinite Energy* makes no representation as to any of the content of the articles published. The content of the works published in Infinite Energy are solely the responsibility of the author(s).

Infinite Energy solicits your manuscripts dealing with: Experimental results in cold fusion (LENR) and new energy, theoretical ideas, contemporary and historical opinions, historical articles, short articles on conventional energy or alternative energy, and book reviews: Contact Christy Frazier, Managing Editor (staff@infinite-energy.com), to receive Instructions to Authors for our preferred format. Please do not send papers by e-mail.

New Energy Foundation, Inc.
P.O. Box 2816 • Concord, NH 03302-2816
Phone: 603-485-4700 • Fax: 603-485-4710
staff@infinite-energy.com•editor@infinite-energy.com
http://www.infinite-energy.com

Printed in the United States
Copyright © 2003
New Energy Foundation, Inc. • All rights reserved.

Electrogravitics Systems: Reports on a New Propulsion Methodology *Edited by Thomas Valone*

Anti-gravitational and thrusting effects stemming from the electrical phenomena pioneered by T. Townsend Brown (includes many historical documents).

Order From:
New Energy Foundation, Inc.
P.O. Box 2816 • Concord, NH 03302-2816
Phone: 603-485-4700 • Fax: 603-485-4710

$16.00 North America
$21.00 Foreign

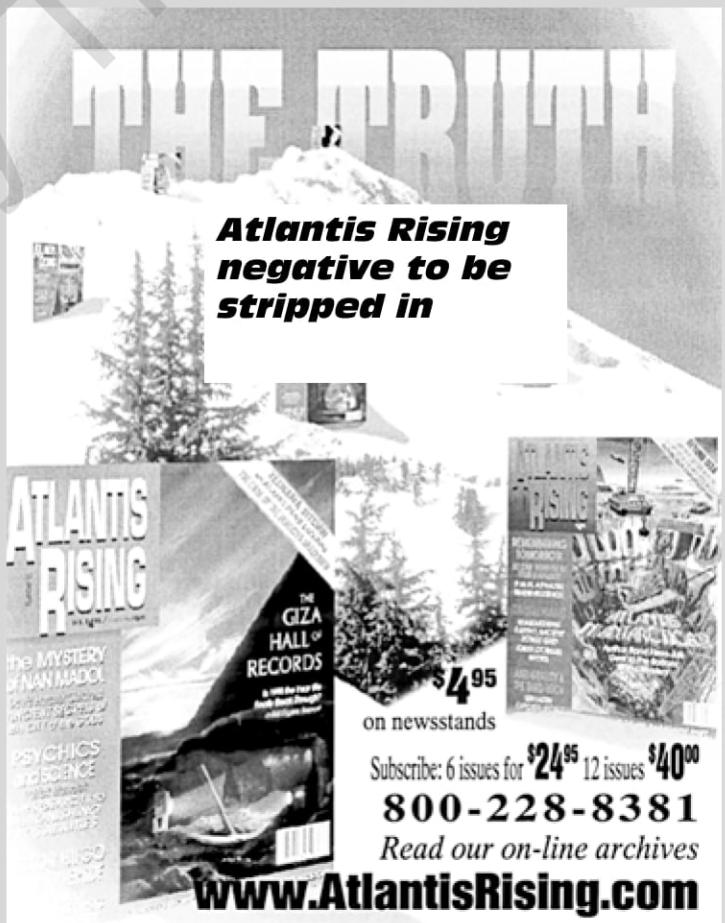

New Energy Times Archive

LETTERS TO THE EDITOR

Transmutation of Nitrogen

I finally located the article about transmutation, which I referenced to Dr. Mallove in prior correspondence. Below is an extract from the article, which had this segment on nitrogen/carbon monoxide transmutation ["Microbes in Geology: Part 2" by Earl Staelin, *THOTH: A Catastrophics Newsletter*, Vol. 6, #6, September 30, 2002]:

Let's look at the experiments that led Kervran to publish his theory of biological transmutations in 1960. The experiments arose from numerous unexplained carbon monoxide poisonings in acetylene torch welders going back 25 years (See Kervran, Beekman, pp. 17-23).

In 1935 Kervran investigated for the French government the carbon monoxide poisoning death of an acetylene torch welder welding steel for the French government. After careful investigation of the air breathed by the welder no source of carbon monoxide could be found. In subsequent years Kervran investigated numerous other deaths of welders from CO poisoning and no source of CO was ever found. Finally, in 1955 Kervran again was called upon to investigate the deaths of three more welders by CO poisoning. This time an extremely thorough investigation was performed involving numerous specialists from different fields over a period of four years. Again no source of carbon monoxide could be found. This finding is not surprising since the great heat of red-hot iron (or steel) should cause complete combustion of all carbon. Numerous tests were performed to consider all conventional explanations.

Such CO poisonings of welders and failure to find a source of CO were by no means confined to France. In England and especially Germany detailed studies were done to determine the cause of the CO poisonings. Careful measurements of the air near red-hot welding operations were unable to find a trace of CO (Kervran, *BP*, p. 20). Not long ago I talked with a retired former director of maintenance at the Gates Tire Co. in Denver, Colorado and he told me that they also had a problem with CO poisoning among welders but had never been able to discover the source of CO. He said the problem was solved once they supplied air to the welders through tubes from a source away from the welding itself.

Based upon all the evidence Kervran finally concluded that nitrogen in the air when heated by red hot iron or steel had been transmuted in the body to carbon monoxide. Thus, N2 = CO, which involves the movement of one proton and one neutron from the nucleus of one nitrogen atom to the other, thereby changing one atom to carbon, and the other to oxygen. After over four years of painstaking research into the welders' CO poisoning, Kervran published his results and theory of biological transmutations in 1960. The findings that led him to this conclusion were as follows:

1. No source of carbon monoxide was ever found.
2. Every surviving welder in the workplace was tested, and the blood of all tested high in carbon monoxide, some approaching a fatal level.
3. The helpers who worked nearby the welders but not in the immediate vicinity of the red hot steel were also tested. None of the helpers had elevated levels of carbon monoxide in their blood.
4. When helium was tested in place of nitrogen, the welders no longer got carbon monoxide poisoning (Kervran, *BP* p. 21).
5. When the welders' air supply was provided through tubes from nearby air that was not exposed to the red hot metal, carbon monoxide poisoning no longer occurred.
6. It was later determined that the iron must be heated to a deep red or hotter, or to a temperature of more than 400°C (752°F) (experiments on rabbits and humans; Kervran, 1964, *BP*, pp. 20-21; Swan House Pub., pp. 18-19). When the iron is bright red (considerably hotter) the effect is quick (Kervran, Swan House Pub., p. 19).
7. An argument that the carbon monoxide could have been produced as a result of increased oxygen pressure was disproved in 1963, showing that the production of CO occurs independently of oxygen pressure. (Desoille, H. and Truffert, "Absence de correlation entre la pression de l'oxygene et l'oxyde de Carbone dans le sang," *Arch. Mal. Prof.*, July, 1963.)

Kervran reasoned from these facts as follows: The nitrogen molecule in air has two nitrogen atoms which are 1.12 Angstroms apart. The electrons circulate in a common orbit around both. The carbon monoxide molecule's nuclei are 1.09 Angstroms apart. One proton and one neutron move from one nitrogen atom over to the other nitrogen atom, changing one N atom into carbon and the other into oxygen. The electrons stay in the same orbit as the nuclei move slightly closer together. Kervran states that the first five protons in an atom (as in boron) are in an inner orbit (Kervran, *BP*, p. 102), while elements with more protons, such as carbon and nitrogen have additional protons in a larger orbit. Kervran states that it appears that the protons in this second orbit are not as tightly bound, requiring less energy to dislodge them. Kervran believes that a proton and neutron in the second orbit of one of the nitrogen atoms in a nitrogen molecule are energized and resonate with the nitrogen activated by the infrared wavelengths generated by the red hot iron and under the influence of an (as yet) unidentified catalyst, probably present in the lungs or blood, the proton and neutron move from one nitrogen atom to the other, changing nitrogen into carbon monoxide (whose spectral pattern has two peaks at 8 and 9 microns in the infrared) instead. The energy from iron at 1100°C to 1300°C resonates in the infrared at 6 to 8 microns (Kervran, Beekman, p. 40). Thus, red hot iron and CO have a common resonance at 8 microns in the infrared. Further evidence that a transmutation occurred is afforded by the fact that the CO poisonings stopped completely once the welders were provided with air to breathe through tubes from a location away from the red hot iron. . .

I actually plugged "transmutation of nitrogen" into a search engine and found that nitrogen transmutation is accomplished through a vast number of different ways ever since the early twentieth century, but none are done in this particular way.

James Wenskus, Jr.
Rochester, New York

New Energy Times Archive

BREAKING THROUGH

ICCF10: A Message from the Front

by Eugene F. Mallove, Sc.D.

As we send this issue of *Infinite Energy* to our printing company in Manchester, New Hampshire in early September, we have just returned from the exhilarating Tenth International Conference on Cold Fusion (ICCF10) in Cambridge, Massachusetts—very near and also *at* MIT. Yes, there was an historic set of excess heat-producing cold fusion demonstrations at Prof. Peter L. Hagelstein's offices at MIT in the Department of Electrical Engineering and Computer Science! There is a staggering amount of news about cold fusion and low-energy nuclear reactions (LENR) to report from the conference—a lot to digest even for a veteran attendee of ICCFs. Time and space do not allow a lengthy report in this *Infinite Energy*, but it is likely that by the time you receive this issue I will have posted a special review of ICCF10 on our website (www.infinite-energy.com). Of course, there will be a full report in the next issue of the magazine (out in November), and readers should also consult the material being posted on www.lenr-canr.org. *Infinite Energy's* non-profit New Energy Foundation, Inc. plans to offer soon one or more DVDs that will highlight important conference lectures—and possibly a set of DVDs covering the entire conference.

For now and to whet your appetite for more information, here are some of the high points to be taken from ICCF10:

•During ICCF10, Dr. Mitchell Swartz's Fleischmann/Pons-type electrolytic palladium Phusor/low electrolyte conductance heavy water/palladium cell performed flawlessly in Prof. Hagelstein's lab at MIT. Its excess power ranged from 167% to 267% as Dr. Swartz altered the experimental conditions. This excess heat, as measured by his precision calorimeter, persisted from Sunday, August 24 to August 30, longer than ICCF10 itself. The excess heat was interrupted on the last day only to bring the equipment back to Wellesley, Massachusetts—otherwise it would have continued much longer.

•Prof. John Dash of the physics department at Portland State University in Oregon and his summer high school student interns also put on historic demonstrations of excess heat at Prof. Hagelstein's lab. They used simple but effective calorimetric apparatus, which allowed observers to check the level of excess heat for themselves. This proves that even high school students can be more effective on the frontiers of science than the U.S. Department of Energy and the 1,000-plus MIT professors who did *not* attend ICCF10. Only two MIT professors attended—Prof. Hagelstein and ex-Prof. Keith Johnson, both of whom have been involved in the field since its early days. (This, despite the 150 to 200 ICCF10 posters that I had earlier placed around MIT and a prominent ad in the *Boston Globe* which Prof. Hagelstein paid for from his personal funds.) Only a few MIT students showed up—outnumbered by the high school students in Prof. Dash's group from Portland State University in Oregon. (It should be noted that the both the *Boston Globe* and the *Boston Herald* chose to boycott the conference, despite having been repeatedly alerted about its significance.)

•What is now being called the Letts-Cravens Effect—excess heat stimulated by laser light irradiation of cold fusion electrolytic cell cathodes—has now been independently observed by three outside groups: Dr. Michael McKubre of SRI International, Dr. Edmund Storms in New Mexico, and Dr. Mitchell Swartz in Wellesley, Massachusetts. This phenomenon, you may recall, was the subject of the "Fire from Water" cover story in the last issue of *IE*. Low-level laser light power is input and a huge power excess emerges, for example: 30 milliwatts input, 1 watt output (a 30-fold multiplication of input power). This is evidently a highly repeatable effect—one that has the potential of breaking through into numerous other labs around the world.

•Dr. James Patterson and his colleagues from Sarasota, Florida revealed a stunningly simple, robust, and ingenious gas-phase cold fusion reactor that has produced excess heat for months on end. Full details will be provided to the public in the near term; he is not seeking patent protection at this point.

•Helium-4 correlated with excess heat has been observed now in a solid-state LENR device by a laboratory effort sponsored by the Italian government.

•The astonishing nuclear transmutation experiment carried out by the Iwamura group at Mitsubishi Heavy Industries Advanced Technology Division, which was reported in *Infinite Energy* (#47, pp. 14-18) and later published in the *Japanese Journal of Applied Physics,* has now been reproduced by the A. Takahashi group at Osaka University. In this experiment, deuterium (heavy hydrogen) gas is made to flow through a palladium membrane onto which another element, such as cesium or strontium, has been deposited. With no energy input (other than the pressure of the gas) the deposited element transmutes to another element. For example, cesium declines and the rare earth element praesodymium appears and grows. Or, strontium declines and molybdenum grows. The term "grow" is appropriate since, to make the new elements, it is necessary for the starting nuclei to "absorb" four deuterium nuclei! Obviously, this flies completely in the face of every canon of basic chemistry, but the evidence for the result is now overwhelming. It is nothing short of modern alchemy.

•Finally, we are delighted to report that a company in Israel, Energetics Technologies Limited, which began its multi-million dollar cold fusion effort only two years ago, has already achieved excess heat in a variety of processes. Funded by investors in the United States, the fifteen-member staff of Energetics Limited is aiming directly at the commercialization of the technology. The leader of the effort, Dr. Arik El-Boher, made a stunning presentation at ICCF10, which caused many jaws to drop.

There is much more, but I need to end these highlights. Though the "cold fusion war" has not yet been won—and it could still be lost—the field seems to have picked itself up with the remarkable turning point of ICCF10. ICCF11 will be in Marseilles, France in October 2004.

New Energy Times Archive

The Mystery and Legacy of Joseph Papp's Noble Gas Engine

Eugene F. Mallove

If you thought that the saga of cold fusion was bizarre, labyrinthian, and astonishing with its mother-lode of unexpected findings—from nuclear-scale excess heat to the rebirth of alchemy in low-energy nuclear transmutation, discoveries alternately persecuted or ignored by the scientific establishment—the cold fusion adventure doesn't hold a nuclear candle to the story of Joseph Papp and his noble gas engine. The Papp engine saga seems to have had its roots in the 1950s, but it only came into public view in 1968. And, strangely enough, there may well be an underlying physics that links elements of the two stories and their profoundly heretical science. Pathological skeptics of cold fusion—and perhaps some cold fusion researchers—may laugh at or recoil from this synthesis, but they will be treading on thin ice.

One of the best overviews of the Papp story appeared in California's *San Jose Mercury News* newspaper on August 27, 1989. We have reprinted David Ansley's exemplary account, which was triggered by the cold fusion announcement some four months earlier (p. 14). Read Ansley's piece to get the gist of what had happened up to mid-1989 with the Papp engine. We also reprint a well done story that ran much earlier in *Private Pilot*, in December 1968 (p. 49). But the Papp saga has progressed far beyond those days, hence we are devoting a substantial portion of this issue of *Infinite Energy* just to begin to recount the tale of the Papp engine as it has never been done before. There is very likely to be more to come. . .so stay tuned. (We are looking into the possibility of preparing a DVD made from video tapes of Papp's demonstrations already in our possession and from present day experiments, if permissions can be obtained.) This editor has been aware of claims about the Papp engine since about 1992, but it has only been within the past three years that sufficient information has emerged to change my view from curious onlooker to acceptance of the engine's validity.

The basic "problem" with cold fusion is, of course, that water in contact with metals with a bit of low voltage electrical excitation is not supposed to make nuclear reactions and release huge thermal excess energy per atom of presumed reactant. The problem with Papp's noble gas engine is that the noble gases employed—argon, helium, krypton, neon, and xenon—are essentially non-reactive chemical elements (except in certain exotic combinations known to modern chemists); that's why they are called *noble*. How can such gases, "pre-treated" or otherwise, explode with unusual violence and drive a reciprocating single-cycle engine—a retrofit device from an ordinary gasoline engine (lubricated with oil to be sure), but one with *no cooling system, no fuel system, and no exhaust*? On its face, Papp's engine appears inconceivable—until the evidence is weighed very carefully. Once the battery-driven electric starter revved up the Papp engine (according to dozens of initially skeptical witnesses), the engine—equipped with an alternator—ran with no outside electrical input. And, even if such "miracle" reactions of noble gases should produce interminable explosions from a tiny volume of gas, pushing pistons and driving a large flywheel, why didn't such an engine run very hot? It didn't. What about the supposed need for a much lower temperature reservoir to make this "heat" engine work at all? If the engine is a monumental "fraud," it is a very, very challenging one to try to pull off.

In the Beginning

How to begin? Let's try this synopsis: A technically schooled draftsman and ex-pilot, Josef Papp (pronounced "Pop" in proper Hungarian), emigrated from Hungary to Canada in 1957 after the ill-fated anti-Communist revolt and Soviet invasion of his country. Perhaps he may have made paper or microfiche copies of documents relating to some sensitive R&D projects in Hungary and he took them with him to the New World? That's only educated speculation. Otherwise, if his independently

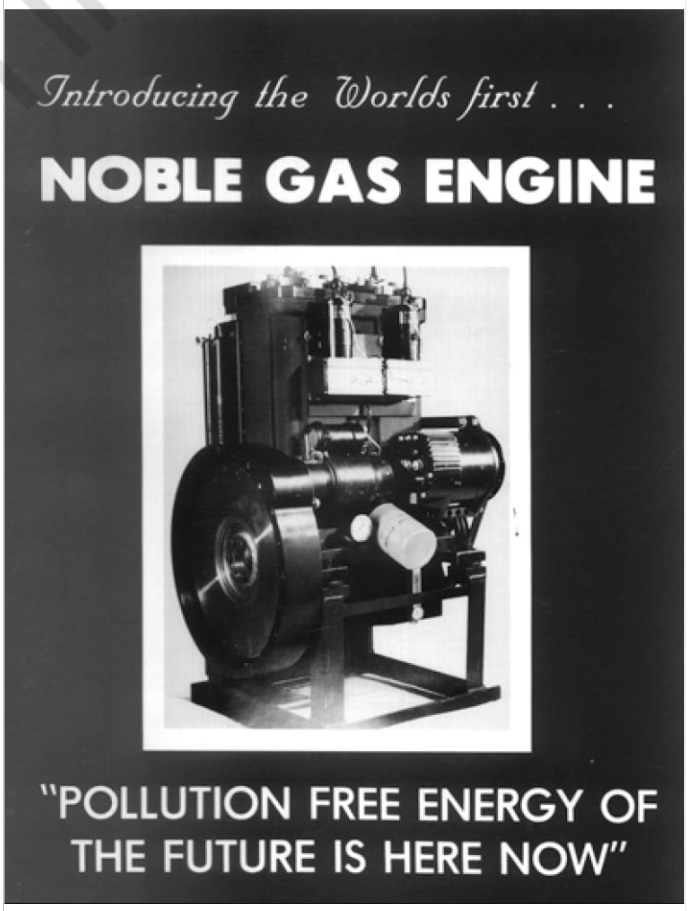

Noble Corporation promotional flyer showing one of Papp's original engines—one of the many efforts to recover the astonishing Papp engine technology.

New Energy Times Archive

developed ideas really worked, as they seem to have, he was either extremely lucky in finding a hidden secret of Nature, or he was an unfathomable genius. He did not seem like the latter. From all accounts, he was an extremely paranoid, very unstable, selfish, and unpredictable man, who was probably one of his own worst enemies. There is little evidence that he understood the physics of what he had, but however the process was developed—it seemed to have worked in a way that seems "too good to be true"—it was an almost fully formed new energy technology that came very close to coming under the wings of some of the world's largest technology corporations.

The story entered its second phase with what seems like a preposterous diversion: In Canada in the early 1960s, Papp worked secretively to develop a mysterious, sleek "submarine" that looks like something out of a "Star Wars" movie. He claimed that he would cross the Atlantic with it in much less than a day—that's what he told Canadian television. (It was a big media story in Canada in the summer of 1966, but most of you probably missed it, though Papp wrote a now hard-to find book about the episode, entitled *The Fastest Submarine*.) Then he disappeared. Within days, Papp was found by authorities bloodied and floating on a rubber raft off the coast of France. Papp claims to have made the ocean crossing in only thirteen hours after he left North America. Where was the wondrous submarine? "Lost at sea," of course, according to Papp. The fantastic claim was soon debunked in a very embarrassing way—but, in truth, no one has ever found the submarine either in Canada or in the Atlantic. Why Papp thought he could get away with this stunt and how this episode seems to clash with what comes next—the scientifically interesting part of the Papp saga—is a mystery and may forever be. Papp is dead—cancer took him on April 13, 1989, three weeks after Fleischmann and Pons announced cold fusion.

Papp's "submarine."

But apart from this embarrassing, bizarre episode with the submarine, Papp left behind one of the most tantalizing legacies in the history of free energy: There exists nearly rock-solid evidence now that Papp really *had* managed to build a robust engine of over 100 horsepower (75 kilowatts) that was "fueled" by a mixture of, we believe, "pre-treated" noble gases (probably mixed with some air). Though it had no exhaust and no cooling system, it had huge torque even at low RPM (776 foot-pounds at only 726 RPM, the result of one certified test—see Exhibit A). Dozens of astonished engineers, scientists, and investors—even a Federal judge with an engineering background was blown away by it—have seen the engine working in closed rooms for hours, which would have killed its occupants with toxic gases had it been a hydrocarbon-fuel engine. There was absolutely no exhaust, no visible provision for any exhaust! The engine ran cool—only about 60°C (140°F) on its surface, it has been reported by several reliable observers. All these people, who had years to try to debunk it, became convinced of the engine's reality. They all failed to discover a hoax. But here is the ultimate triumph of the Papp engine: Today, ongoing research in the United States—totally independent of Papp and his former financial interests—has proved conclusively that noble gases, electrically triggered in various ways, can indeed explode with fantastic violence and energy release—melting metal parts and pushing pistons with large pressure pulses. Some of the people performing this work, or who have evaluated it, are from the cold fusion field, others are experienced plasma physicists. Some will allow their names to be revealed, while others in senior positions at major research institutions must remain anonymous for now. I am confident, however, that these scientists will eventually "go public." They should, when circumstances permit.

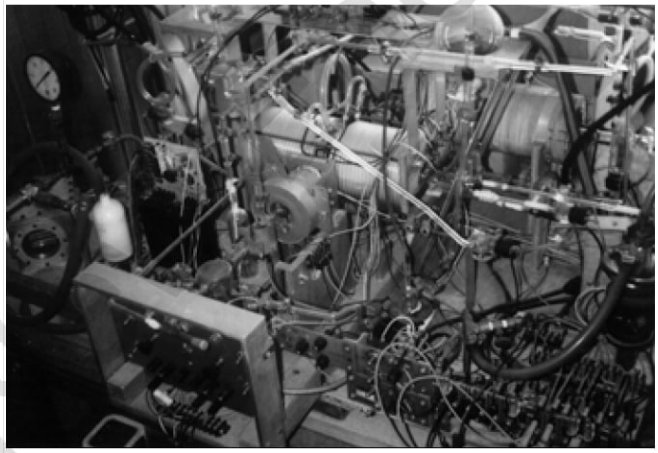

Photo courtesy of Jim Sabori.

Papp's original "gas preparation lab" apparatus in a bonded storage warehouse during IRS proceedings, following Papp's death in 1989. Reliable information is that this apparatus was stolen by unknown persons. Others, formerly associated with Joseph Papp, have built duplicate gas preparation apparatus of unknown effectiveness.

Two Explosions, One Death

Apart from the intense contemporary work to resurrect the Papp engine in its full cycling functionality and the independent certification test in 1983 (see p. 9), what other proof is there that Papp's engine was for real? Sad to say, this evidence is the death of one person and the severe injury of three others at a public demonstration of the engine on November 18, 1968 in Gardena, California. At that event, the engine exploded with an evident energy release that no internal combustion engine could touch. Read the eyewitness testimony of engineer Cecil Baumgartner (p. 31) in my interview with him this year. He was representing the top management of the TRW aerospace corporation that day. The previous month (on October 27, 1968) Baumgartner and others had observed one of the detonation cylinders of the engine test fired in the California desert. In full public view, just a few cubic centimeters of noble gas had been admitted with a hypodermic needle to the sparking chamber, and this made the thick steel-walled chamber peel back like a banana when the device was electrically triggered. The collaborating observers from the Naval Underseas Warfare Laboratory (as the Pasadena, California lab was then called), who attended the desert test, had earlier sealed the chamber so that Papp or others could not insert illicit explosives as part of a hoax. Their names, according to Baumgartner, were: William White, Edmund Karig, and James Green.

Feynman's Mistakes and the Recovery

But at the public meeting the next month at which the fatality occurred (see the local newspaper account of the fatality and injuries—p. 30) was Caltech physicist Richard P. Feynman (1918-1988), who had worked on the Manhattan

Infinite Energy Archive

atomic bomb project in World War II. Before even arriving at the demonstration, Feynman assumed that the Papp engine, whose operation he was about to witness, *had to be* part of an elaborate hoax. We know this because he recounted his reactions during the episode in his widely circulated internet account touted by the "skeptic" community (see "Mr. Papf's (sic) Perpetual Motion Machine," p. 29).

But here is the central problem with Feynman's analysis (which has many other errors of fact and logic embedded in it): There was a court action against Feynman by Papp and his backer, Don Roser of Environetics, Inc., as a result of Feynman's inept attempt to disprove the Papp engine with his unauthorized pulling of an electric control-circuit wire that Feynman egregiously imagined had to be powering the engine. It was unfortunate for Feynman that the wire's gauge was far too thin even *had there been* a secret electric motor within the retrofit Volvo engine. Furthermore, as you will read, the engine kept running even after the flimsy wire was removed. Feynman asserted that Papp most likely had deliberately planned to blow up his own engine to avoid subsequent discovery of the "fraud"! And, Feynman acknowledges that there was an out-of-court settlement with Caltech. Surely, had there ever been the slightest piece of evidence that conventional explosives blew up the Papp engine that day, Caltech would most certainly not have had to settle. Papp would soon have been charged with manslaughter, no doubt, and Feynman would surely have cited this evidence publicly. He was not one to shrink from dramatic gestures. Caltech also had the motive and the means to skewer Papp with the kind of evidence that is routinely gathered by police departments and crime labs following explosion accidents.

However, all records of the investigation into the accident appear to have vanished down some kind of a memory hole. I believe they exist somewhere, but we have not been able—yet—to obtain them. On June 29, 1998, Caltech's very helpful Associate Archivist, Shelley Erwin, faxed me: "Well, the mysterious affair with Mr. Papp/Papf continues to remain mysterious. I have found nothing in the Feynman papers that refers to it. Nor is there any obvious reference to Mr. Papp or the lawsuit in administrative or publicity papers from the time. We do not have a clippings file for the 1960s, so that is one type of resource I did not investigate. . .I think I have done all I can here, without any useful result. We would be interested to know how your search comes out—if indeed this is a true account. I wish I knew."

I made more recent contact with various Caltech offices, which could not provide me with any records—not even its public information office had newsclips, and efforts to locate official accident reports in California have come up dry. Some of these may have been destroyed, according to some police departments contacted. After all, this is an accident that happened thirty-five years ago. But the point is that nowhere, so far, do we have *any* evidence that the explosion was a result of illicit explosives. Failing such direct evidence of hoax, the proved violence of the explosions—the November 1968 and the October 1968 ones—strongly point to the reality of the Papp process. But we also have the contemporary laboratory work that establishes convincing evidence—visual and by instrumentation—that noble gases can be made to explode and achieve over-unity. Heroic work on a shoestring budget over the past few years is recounted in broad scope by researchers Mark Hugo and Blair Jenness in Minnesota (p. 51). We hope to feature their work in greater depth in future issues. Heinz Klostermann of California, whom I met two years ago, has been of great assistance in assembling some of the information that went into this issue of *Infinite Energy*. On p. 55, he discusses his broad knowledge of many of the groups working in the U.S. in the past and today in the effort to recover the Papp engine technology. He has begun his own independent initiative.

Two anonymous Ph.D. investigators circa 2000, with prominent positions in the cold fusion field, certainly estimated over-unity factors beyond 10 and perhaps even 100—for what may well be a suboptimal version of the Papp noble gas process. To run a cyclic 100 HP engine as Papp did would require detonation energies possibly far beyond these preliminary factors, but remember: no one who is attempting to recover the technology knows the exact pre-treatment process and gas mixture that Papp employed. The patents, so far, have not been adequate to learn exactly what was done. Finally, the eyewitness accounts, as well as the dynamometer test of 1983, give further support for the validity of the Papp technology.

Feynman is widely known today for his aid in helping to resolve the space shuttle Challenger accident of 1986. The brilliant, entertaining, passionate, and often self-effacing physicist with the Far Rockaway, New York accent won the Nobel Prize for physics with Julian Schwinger and Sin-Itiro Tomanaga in 1965, three years before the explosion of the Papp engine in Gardena. He is rightly considered to be a very great scientist, whose quest to expand the frontiers of physics and to convey the excitement of science to the public was legendary and noble. In fact, I had often thought that if Feynman had lived into the cold fusion era, he might have set some of the anti-cold fusion bigots straight. Several years before Feynman's Nobel Prize award, in April 1963 in several wonderful lectures that have been reprinted in a book, *The Meaning of It All* (Addison-Wesley, 1998), Feynman made these wise observations:

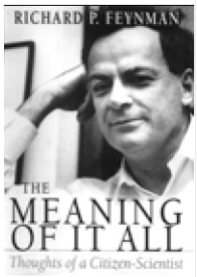

> "The exception tests the rule." Or, put it another way. "The exception proves that the rule is wrong." That is the principle of science. If there is an exception to any rule, and if it can be proved by observation, that rule is wrong. (p. 16)

> The rate of the development of science is not the rate at which you make observations alone, but more important, the rate at which you create new things to test. (p. 27)

> There is no authority who decides what is a good idea. We have lost the need to go to an authority to find out whether an idea is true or not. We can read an authority and let him suggest something; we can try it out and find out if it is true or not. If it is not true, so much the worse—so the "authorities" lose some of their "authority." (p. 21)

Indeed, the "authorities" of modern physics seem to

New Energy Times Archive

Exhibit A: Joint Affidavit Concerning the Papp Invention—A Two Cylinder, Sealed Engine Which the Inventor Describes as Being a Noble Gas Plasma Engine

Date of Testing:	February 26, 1983
Engine Operator:	Joseph Papp
Witness to Test:	George J. Nolan, Ph.D.
Witness to Test:	Dennis Hodges

This Affidavit was prepared for The Phoenix Group, an Oklahoma Joint Venture, and is the Property of the same.

Observations Concerning the Papp Invention

The Papp Invention is essentially a closed, reciprocating, two-cylinder engine which does not require an air supply and does not emit exhaust gases. It is comparable to an automobile engine in size.

The engine is powered by a fuel mixture, which according to the inventor, contains five (5) inert gases. The engine does not use any hydrocarbon-fuel, except as a lubricant in the crankcase. The fuel is loaded into the piston cavities, and is claimed to be the working fluid as well as the fuel. There is no cooling system, and no fuel tank. The only outside source of power that is utilized by this engine is two (2) twelve volt (12V) batteries to start the engine. Once the engine is running the two batteries can be removed. The working model is essentially the same as the working drawing (side view). . .

The speed of the engine is variable, using a rheostat, and was operated between 726 RPM and 100 RPM. The engine runs quietly and is stable at any RPM. The noise level can be compared to a low RPM electric motor.

The engine is attached to a new dynamometer capable of rating torque, RPM, horsepower and torque rise which carries the brand name of "A&W" and is a Nebraska 400 model, serial No. CD 879.

The dynamometer and engine was connected by a mounting apparatus which exposes the drive line from the engine to the dynamometer. The dynamometer was checked for calibration by Mr. Dennis Hodges just prior to running the engine and was found to be properly calibrated and attached to the engine. The engine was operated for testing on the 26th day of February, 1983, by the inventor.

The engine was operated for a total of 1 hour and 6 minutes with no apparent heating problems and without additional fuel.

During the testing the engine was operated at different speeds. The first was at 700 to 730 RPM. The dynamometer readings were: RPM, 726; Torque (foot pounds), 776; Horsepower, 107; Torque Rise, 418.

AFFIDAVIT

County of Cherokee
State of Oklahoma

We, George J, Nolan and Dennis Hodges, both of legal age and being first duly sworn state as follows: We hereby certify that we witnessed the running of the engine which is described herein on the 26th day of February 1983.

We also certify that everything that is stated in this document, containing three pages, all initialed by us, is true and correct, and that the figures written in were written by Dennis Hodges and George J. Nolan as they witnessed them during the testing. [Signed and dated by Dr. George J. Nolan, Professor of Chemistry, Northeastern State University, Tahlequah, Oklahoma and Dennis Hodges, Owner, Independent Diesel Service, Broken Arrow, Oklahoma.]

Exhibit B: U.S. Army Letter—October 17, 1968

Department of the Army
United States Army Tank-Automotive Command
Warren, Michigan 48090

Mr. Joseph Papp
Environetics, Inc.
15821 South Broadway
Gardena, California 90247

Dear Mr. Papp:

We would appreciate it if you could send us additional information on your Papp engine mentioned on Page 25 of the 11 Oct. 68, issue of *Design News*.

Sincerely yours,
Victor F. Skirmants

Exhibit C: U.S. Navy Letter—October 29, 1968

Department of the Navy
Naval Undersea Warfare Center
3202 E. Foothill Blvd.
Pasadena, California 91107

Don Roser, Inc.
15821 S. Broadway
Gardena, California

Dear Mr. Roser:

Congratulations on Sunday's test. I was told it was a success in demonstrating Mr. Papp's power source.

Please keep us informed on your progress in developing this power source for a prime mover. We would be interested in any additional information you are ready to make available.

I would like to obtain a copy of Mr. Papp's book concerning his submarine. Please tell me the title, name of the publishing house, and release date.

Sincerely,
C. Reisman

have lost their authority completely. If one of its most dynamic and iconoclastic members, Feynman—a hero to physicists as well as to the general populace—can have made such a horrible error in judgment in the matter of his observation and actions at the Papp engine demonstration in 1968, then there is real trouble, and this is now proved. Feynman's tragic mistake would be just that, by the way—a *mistake* whether or not the Papp engine is real. If it *is* real, so much the worse for Feynman's legacy, for science, and for civilization. The inadequate methods by which Feynman rendered a snap judgment on the Papp engine that day reflected poorly on him; his methods were incapable of discovering the truth about this device. And then there are the questions about what did Feynman know and when did he know it, concerning any accident reports that may have been available to him.

In retrospect, this 1968 event seems like a foreshadowing of many other horrors that were to come in the 1980s, through the 1990s and beyond—vicious persecution of the cold fusion/low-energy nuclear reaction field by "authorities" and their followers. The so-called "skeptics" of CSICOP and elsewhere, who chose to use Feynman's reflections on the Papp demonstration as an example of how science should be done, should hide their heads in shame, but they won't. They will be outraged that one of their icons and their belief in the impossibility of new energy sources are found wanting. They will not admit this, of course.

The Patents

Joseph Papp was issued three United States patents for his process and engines, one of which is reprinted in full and the others are briefly discussed and the introductory parts reprinted (p. 21):

• "Method and Means for Generating Explosive Forces," applied for on November 1, 1968, granted as U.S. #3,680,431, August 1, 1972, assigned to Environetics, Inc. of

New Energy Times Archive

Exhibit D: Lockheed Letter—October 12, 1970

Lockheed Propulsion Company
A Division of Lockheed Aircraft Corporation
Redlands, California

Environetics, Incorporated
15821 South Broadway
Gardena, California

Attention: Mr. Don Roser

As I outlined in our telephone conversation of yesterday, Lockheed Propulsion Company is interested in investigating possibilities of participating in the U.S. Government Health, Education & Welfare Department's automotive anti-pollution programs. The particular effort now being considered is entitled "Federal Clean Car Incentive Program," H.E.W. RFP #EHSD 71-NEG32, dated 10/2/70.

We at LPC feel that work of this nature should be vigorously pursued by all industrial concerns capable of contributing to the solution of the Untied States air pollution problems; certainly the solution or mitigation for automotive pollution would be of inestimable value to this country. Therefore, so we may be informed of potential new low pollution automotive propulsion sources, and ultimately participate in a joint effort toward developing promising systems, we would be most interested in meeting and discussing Environetics work in this area.

As you stated, because of current litigation [Editor's Note: Litigation arising from the 1968 explosion.], such a meeting is not now possible. We can only hope that this obstacle is speedily removed as pollution problems in this country are so pressing that it is not in the best interests of any of us to allow consideration of promising alternative power systems to be delayed.

Thank you for your courtesy, Mr. Roser; I will be looking forward to the time when we can meet and discuss the Environetics concepts.

Yours very truly,
Phillip B. Campbell
Technical Specialist

Exhibit E: Department of Energy Letter—January 27, 1977

Department of Energy
Washington, D.C. 92705

Mr. Joseph Papp
1921 East Pomona Street
Santa Ana, California 92705

Dear Mr. Papp:

Your letter of November 15, 1977 to President Carter concerning your concept of a "Thermonuclear Noble Gas Plasma Engine" and its attachment was referred to this office for reply.

Inasmuch as the subject matter, to the extent described in the attachment, appears to involve atomic energy it would seem to come under the purview of the Atomic Energy Act of 1954, as amended, particularly #151(c) which provides, *inter alia*, as follows:

> "Any person who has made or hereafter makes any invention or discovery useful in the production or utilization of special nuclear material or atomic energy, shall file with the Commission* a report containing a complete description thereof unless such invention or discovery is described in an application for a patent filed with the Commissioner of Patents by such person within the time required for the filing of such report."
>
> * The Atomic Energy Commission was abolished and the Energy Research and Development Administration was Established by the Energy Reorganization Act of 1974 made effective on January 19, 1975 and subsequently all functions of the Energy Research and Development Administration were transferred to the Department of Energy October 1, 1977 under the Department of Energy Organization Act.

#151 also provides that reports filed pursuant to subsection (c) of this section and applications to which access is provided under subsection (d) of this section shall be kept in confidence by the Commission*. . .

To determine whether your concept may be or programmatic interest to the Department of Energy, we are forwarding your letter and its attachments to our technical staff for review. As soon as the review is completed we shall notify you and advise whether your concept is of interest to the Department of Energy. In the interim, you may wish to consider filing of a patent application covering this concept to protect your rights.

We appreciate the opportunity to review your concept.

Sincerely,
James E. Denny
Assistant General Counsel for Patents

Gardena, California; Papp declares the general nature of the noble gas mixture necessary to produce explosive release of energy. He also suggests several of the triggering sources that may be involved. There is little doubt that Papp is not offering full disclosure here, but there is no doubt that others who have examined this patent and followed its outline have already been able to obtain explosive detonations in noble gases. *Caution: Anyone who undertakes to try to duplicate this process must be very careful about safety issues.*

- "Method and Means of Converting Atomic Energy into Utilizable Kinetic Energy," applied for on October 31, 1968, granted as U.S. #3,670,494, June 20, 1972, and assigned to Environetics, Inc.

- "Inert Gas Fuel, Fuel Preparation Apparatus and System for Extracting Useful Work from the Fuel," applied for September 4, 1980, granted as U.S. #4,428,193, January 31, 1984, and assigned to Papp International, Inc. of Lincoln, Nebraska. This is a very lengthy patent, filled with many insights about how his sealed, non-cooled engine process may have worked.

One of the high points of subsequent activity by Papp and his colleagues was the independent certification testing in 1983. Thanks to the late Dr. Paul Brown and to Jack Kneifl, I have had in my files for several years photocopies of the actual documentation of the certification test, which was done in Oklahoma. It has been circulating among those who have been interested in reviving the Papp technology, and includes Chemistry Professor Nolan's impressive C.V. The affidavit is reprinted in Appendix A.

In Search of an Explanation

Assuming that the Papp engine phenomena that have been observed are valid, no one can claim to have a satisfactory and comprehensive explanation for what is going on. In my view, the physics associated with the detonation, light emission, and other phenomena in these noble gas explosions is quite beyond contemporary understanding. It is of interest that Dr. Randell Mills and his colleagues at BlackLight Power Corporation have observed excess heat phenomena associated with microwave stimulation of helium and hydrogen mixtures, but

New Energy Times Archive

Exhibit F: Deutch Letter to Hatch—November 23, 1977

Department of Energy
Washington, D.C. 20585

The Honorable Orrin Hatch
United States Senate
Washington, D.C. 20510

Dear Senator Hatch:

Dr. Schlesinger has asked that I do what I can to assist Mr. Charles Kennedy, of Salt Lake City. Mr. Kennedy is involved with what appears to be a novel development in energy production. I have personally contacted Mr. Kennedy on this matter, and my Associate Director, Dr. Kane, has also done so.

This letter is meant to be an interim report. The invention will shortly be evaluated by representatives of General Motors Company. We have discussed this with Mr. Kennedy, Mr. Allen, his attorney, and Mr. Wallace Edwards, of General Motors. All agree that there is nothing further that the government should do, pending the outcome of the evaluation. It would, of course, be ideal if no government involvement were to be required.

It is only fair to tell you that I am skeptical about the claims made for the invention. I am equally certain, however, that Mr. Kennedy is sincere in his belief that it is highly promising and accordingly a careful review by DOE is warranted.

Whatever the outcome, I will remain aware of what is happening, and I will keep you informed.

Sincerely,
John M. Deutch
Director-Designate
Office of Energy Research

not krypton and argon mixtures. I'm not sure that this has any direct bearing on the Papp conditions, but I mention it for completeness.

Dr. Paulo and Alexandra Correa of Canada were kind enough to abstract for inclusion in this issue of *Infinite Energy* (p. 61) a report that they prepared in the mid-1990s concerning the Papp technology—or at least a crude copy of it. This was based on a limited view; they were given only a video tape, the performance claims, and the patents. They discuss the differences between the plasma and energy phenomena they have pioneered in their PAGD™ excess energy technology, and what they could gather from the Papp technology experimenters' claims.

It is my view that to explain the Papp engine, a very radical departure from conventional understanding of nuclear physics, atomic structure, electricity, and the vacuum state will be required. The general class of models will be those that explain subatomic "particles" and how they interact as manifestations of an aether physics.

The Scandal of Official Inaction

There can be no greater indictment of our energy and science advisory bureaucracy in Washington, D.C. than in the host of letters that made urgent pleas that something be done about the Papp engine. On the positive side, there were letters asking for information about it, such as the one from the U.S. Army shown in Exhibit B, but the other responses evidence the kind of grave sci-

Exhibit G: Admiral McMillian's Letter to President Carter—November 29, 1977

Rear Admiral Ira E. McMillian
Berkeley, CA 94704

President Jimmy Carter
The White House
Washington, D.C. 20500

Dear Mr. President:

The action you take on this letter will: (a) Re-elect you in 1980, (b) Solve the energy crisis, (c)Remove forever U.S. dependence on Arab, Iranian and domestic oil interests, (d) Provide millions of jobs for Americans.

Dr. Joseph Papp, Ph.D. (Papp is pronounced Pop) got his Ph.D. in Communist Hungary. While there he developed a plasma engine. The Communist system, being abhorrent to him, caused him to emigrate to Canada eight years ago. Then he came to the U.S.A. four years ago and settled in California. Mutual friends in Orange County, California told me about him right after I attended your inauguration. (Dr. Papp is in his early forties.)

Dr. Papp has been shot, kidnapped, terrorized, had his telephones "bugged" continuously and is in daily fear of his life; not only himself, but his wonderful wife and young daughter about twelve have been subjected to threats and intimidation and their lives are in danger.

I have signed a statement pledging non-disclosure of the facts concerning the engine and the fuel. I can say the engine works and the fuel is available in inexhaustible quantities. Petroleum and its by-products are not involved at all. There is no smoke, so anti-pollution also will be a thing of the past.

The engine, as I said, does not use petroleum or any of its derivatives. It is a closed, one-cycle reciprocating engine that has no intake, uses no air, and has no exhaust whatsoever. The fuel is self-contained and hermetically sealed in the chambers. An initial power supply for an automobile, for example, will will last for 60,000-75,000 miles. The cylinders can be recharged for about $25 to $30 per cylinder, depending on the size of the engine. The engine needs no coolant (two cylinders for an auto).

Since the engine will run for long periods without refueling and requires no air or oxygen, it can be used for aerospace and submarine application in any environment devoid of oxygen.

The Papp engine applies to usage in heavy duty marine, railroad locomotives and stationary electric power generators, industrial engines and remote servo-activator systems.

The Papp engine with its hermetically sealed cylinder system emits no radiation exhaust nor any chemical pollutants. Based on an energy source that is in exhaustible within the United States.

Presently, Dr. Papp wants to distribute licenses through a planned and carefully controlled licensing method to make a changeover to the new energy system with a minimum of economic and corporate disruption. The Papp Engine and Energy Service is the new, clean, and beneficial energy source of our time, and will be a blessing to all mankind.

Gist: this is a revolutionary engine that operates an auto, say, for fifteen cents per hour, without gasoline, air, combustion or exhaust!

This engine can drive a combat tank three times around the world without re-fueling. It can operate an aircraft at 30,000 feet or more or an underwater craft 300 feet or more. Military planes can stay aloft as long as the crews can hold out! A family plane could fuel every four or five years. The engine can be adapted for a lawnmower, autos, planes, locomotives, aircraft carriers, all types of ships and submarines.

Because of the extreme jeopardy for those involved, a top secret security arrangement set up by the Secret Service, preferably, or by U.S. Marshals, alternatively, is required.

It is my urgent, personal, patriotic request that you arrange a meeting at the earliest possible date with the three principals involved and that a government aircraft, with security agents be provided for: (a) Dr. Joseph Papp, Ph.D., President, Papp Scientific Inventions, Inc.. (b) Mr. George S. Haley, Executive Vice President, Papp Scientific Inventions, Inc., (c) Rear Admiral Ira E. McMillian, prospective officer and participant in Papp Scientific Inventions, Inc.

A visit with you personally in your office will convince you. I stake my life, honor, and reputation on this.

The government aircraft, with requisite security, would pick me up at Naval Air Station, Almeda, California, while Dr. Papp and Mr. Haley could subsequently the same day, be picked up at Marine Corps Air Station, El Toro, California (near Santa Ana HQ of Papp Scientific Inventions, Inc.).

This project will insure the security of our beloved country and will re-elect you in 1980.

Faithfully and respectfully,
Ira E. McMillian, Rear Admiral

New Energy Times Archive

Exhibit H: DOE Letter—October 21, 1988

Department of Energy
Washington, DC 20545

George Lewnes
Office of Administrative Law Judges
Federal Energy Regulatory Commission
Washington, D.C. 20426

Dear Sir:

Thank you for your interest in the U.S. fusion program and the information on the Joseph Papp Pinch Theory (Micro-Fusion). I appreciate your initiative on the behalf of Jimmy Sabori in bring (sic) this to my attention. However my review of the information leads me to conclude that this approach does not justify further Department of Energy attention.

As we discussed in our telephone conversation, the Department of Energy continues to support programs with the goal of developing the potential of fusion. However, after expenditure of many billions of dollars over several decades, and the efforts of thousands of the best scientists and engineers in the world (both in the United States and foreign countries), the technical challenges of conducting controlled and sustained fusion in the laboratory is only now appreciated. The information regarding Mr. Papp's approach does not deal with the challenges associated with controlled release of nuclear energy by the fusion process. Consequently, it is my opinion and that of my technical staff, that further pursuit of Mr. Papp's approach is not warranted.

Thank you again for your interest in the U.S. fusion program.

Sincerely,
Sheldon L. Kahalas, Director
Inertial Fusion Division
Office of Weapons Research, Development, and Testing

ence and technology policy problems in government that would emerge in the cold fusion era. Some letters show that the same people in DOE who obstructed cold fusion acted earlier to obstruct a resolution of Papp's claims! Exhibits A-I are our collection of the text of annotated letters; copies of the originals are in our possession. We thank those who divulged these letters on behalf of the search for truth.

The letter in Exhibit C was evidently written by one of the associates of Navy people who supervised the sealing of the Papp "cannon" so that no illicit explosives could have been inserted in the Papp device that was fired in the California desert.

The letter in Exhibit D shows the sincere interest of another aerospace corporation, other than TRW, which had dropped the Papp engine after the explosion in November 1968. It also proves that the litigation with Caltech was still ongoing in the fall of 1970.

A do-nothing letter from DOE's legal staff, in response to one of several letters that were sent to President Jimmy Carter is shown in Exhibit E.

John Deutch, an MIT Professor who was serving in DOE during the Carter Administration, dismisses the Papp engine in his thinly disguised negative letter to Senator Hatch of Utah (Exhibit F). Ironically, Deutch would later play a two-faced role in the cold fusion saga as it unfolded at MIT when he was Provost there in 1989 (see *IE* #24). He later became Director of the CIA, but was caught in an egregious computer security lapse, which could have landed him in jail.

In the letter in Exhibit G, a sincere U.S. Navy Rear Admiral writes to President Carter in an effort to focus his attention on the Papp engine. It appears that Papp may have misguided McMillian about his credentials (Papp had no doctorate) and the date of his arrival in the U.S.

An insulting letter from the DOE (just months before cold fusion was announced) to one of the witnesses to the Papp engine testing is shown in Exhibit H. George Lewnes, who had an engineering background, had seen the engine run in Florida. Here DOE touts its hot fusion program as the only possible route to fusion! Always the same excuse for not investigating new processes.

A very late letter—1992—from Jack Kneifl in Nebraska, who was part of a team that was attempting to recover the Papp technology, is shown in Exhibit I. Admiral Elmo Zumwalt was a well respected and famous Naval officer. This letter shows that anti-cold fusion DOE people—Drs. Polansky and Ianniello—were also obstructing the Papp engine recovery.

Summary and Looking Forward

There is now a staggering amount of good information available, which at a *bare minimum* would justify a thorough review of the Papp engine matter by official agencies such as the U.S. Department of Energy and military research organizations such as DARPA. There is significant evidence for the release of heretofore unknown explosive energy from noble gas mixtures. The energetic level of these reactions on their face, if confirmed by independent review, may have serious national security and global security consequences (especially in this age of terrorist threat—use your imagination). But the cat is out of the bag, and it cannot be put back. One hopes that the civilian uses of this potential technology will far outweigh the military hazards.

Joseph Papp was a "hero" to have brought this technology to the New World, but his outrageous behavior at many turns helped prevent scientific truth from emerging. Yet at long last, the truth is coming out. There needs to be a wide and deep review of the evidence. Unfortunately, the experience of the cold fusion/low-energy nuclear reaction (LENR) field over the past fourteen years, in trying to get an impartial DOE review of now proved and replicated LENR experiments, does not inspire much confidence that DOE or other official groups will do anything about this—even if the evidence is shoved in their faces. The John Huizengas, William Happers, Richard Garwins, and Steve Koonins (Caltech) of

New Energy Times Archive

this world wield enormous influence within government. They know *a priori* that cold fusion, and now the Papp engine, are nonsense. Therefore, it will fall to the private sector and to individual scientific researchers to deal with or not deal with the Papp engine enigma. We hope that this beginning of *Infinite Energy's* coverage of the Papp engine, and the science that may underlie it, will contribute to the search for scientific truth. Perhaps the Papp saga, and particularly Richard Feynman's negative role in it, will yet help to catalyze a long overdue review by mainstream science of what it thinks it knows and what it thinks it knows cannot be. ❐❐❐

Exhibit I: Kneifl Letter—August 4, 1992

Kneifl Associates, Inc.
P.O. Box 817
Lexington, NE 68850
[Editor's Note: Obsolete address. Jack Kneifl is now in Maryland.]

Admiral E.R. Zumwalt, Jr.
1500 Wilson Boulevard, Ste 641
Arlington, VA 22209

Dear Bud,
RE: Phoenix IV Project: The Noble Gas Plasma Technology

Thank you for taking the time to meet with me on Wednesday last week when I was in town. At that time I indicated that I would follow-up with a correspondence including information on the contacts that I have had in the various departments/offices there in Washington, D.C.

On May 7, 1992, Sandy and I met briefly with Senator Dan Inouye and delivered copies of the proposal regarding the referenced project (you have a copy). The Senator was very favorable toward funding the project until he received the DARPA/DSO two-page point paper referenced below. Richard L. Collins, Administrative Assistant to Senator Inouye and Senior Staffer on the Committee on Appropriations, was given copies of the materials and he requested a review from DARPA/DSO. Since receipt of the DARPA/DSO two-page point paper, Mr. Collins has become very negative regarding the project.

With DARPA/DSO, I have corresponded and met with Dr. H. Lee Buchanan and I have corresponded with Dr. Gary L. Denman, Director of DARPA. Information on these individuals is as follows: Dr. Gary L. Denman, Director, Defense Advanced Research Projects Agency, 3701 North Fairfax Drive, Arlington, VA 22203-1714, (703) 696-2402; Dr. H. Lee Buchanan, Defense Sciences Office, Defense Advanced Research Projects Agency [same address], (703) 696-2237.

As you know, Dr. Buchanan performed an evaluation of the Noble Gas Plasma Technology and prepared a two-page point paper (you have a copy). I have suggested to Dr. Buchanan that he caused a considerable road block for Senator Dan Inouye because the point paper was so negative. I have asked him to provide further correspondence to the Senator, reaffirming his position, however, suggesting that the project should be allowed to proceed because of the following: 1) Although it appears the technology (as theorized) is impossible based on current scientific orthodoxy, one cannot refute the fact that the technology has been successfully demonstrated on numerous occasions during three separate periods over a twenty year period (1969-1989); 2) When recovered, the technology will provide significant benefits in many regards; 3) The reviewing scientists are very curious about the technology and would like to learn more.

Dr. Buchanan has suggested that if we can obtain another independent review of the technology, *e.g.*, from a university or laboratory scientist, that would also emphasize these things, he would consider preparing such a correspondence.

I have corresponded and met with the following personnel from DOE: Dr. Louis Ianniello, Acting Associate Director, Basic Energy Sciences, ER10 GTN, U.S. Department of Energy, Washington, D.C. 20585, (301)903-3081, and Dr. Walter M. Polansky, Director, Division of Advanced Energy Projects, Office of Basic Energy Sciences [same address and phone number].

First of all, I received a letter from Dr. Polansky indicating that the materials he had received were not sufficient to conduct a proper review. Then, on July 28, 1992, I met with Drs. Ianniello and Polansky and they explained that DOE did not normally fund projects at the requested level.

Dr. Ianniello further explained, in order for the project to have any potential for (funding) success whatsoever, the technology should receive independent evaluations from recognized scientists at universities and/or national laboratories.

I have provided a copy of the proposal to Dr. Albert Narath, President of Sandia National Laboratories, Albuquerque, New Mexico (505/844-2745) and Dr. Siegfried S. Hecker, Director (505/667-5101) and William L. "Buck" Thompson, Assistant Director (505/667-8980), Los Alamos National Laboratory, Los Alamos, New Mexico. Dr. Thompson has been especially helpful. I believe both laboratories will be performing an independent evaluation of the technology in the very near future.

I have arranged for independent evaluations of the technology at three universities in the Midwest. These evaluations will begin in the very near future.

I have provided information to the offices of the following Senators and met with the staffer involved in energy research from a few of the offices: Senator Dennis De Concini, Senator William Roth, Senator Peter Domenici, Senator Wendell Ford, Senator Jeff Bingaman, Senator Robert Dole, Senator Paul Simon, Senator Hank Brown, Senator David Durrenburger, Senator Tim Wirth, Senator Daniel Patrick Moynihan, Senator J. Bennett Johnston, Senator Max Bacus, Senator J. James Exon, Senator Barbara Milkulski, Senator J. Robert Kerrey, Senator Paul Sarbanes.

Bud, that will give you a run-down on the contacts that I have made at various levels of government. Since it appears it may take some time to accomplish something at government levels, I am also interested in pursuing funding in the private sector. I though you might also be helpful in that regard.

Specifically, I thought this technology might interest Ambassador Paul Nitze and/or Lester Crown, and I understand both are friends of yours. At one time, during the mid 1970s, General Dynamics did take an interest in this technology, however, became very frustrated in working with the inventor. I can put you in contact with the GD [General Dynamics] Officer (now retired) who arranged the affiliation at that time.

I am very interested in working with you in whatever manner you feel you may be of assistance. In addition, I am willing to provide you with reasonable compensation if you are able to help us obtain the funding we need to accomplish the goals of this project. Please advise me on the specifics, as you see them.

Please let me know if you need additional information. I am able to provide a VHS video which will provide a demonstration of the Noble Gas Plasma Engine in operation, if you feel that would be helpful. I look forward to hearing from you. Thank you.

Sincere regards,
Jack T. Kneifl

New Energy Times Archive

The Dream Machine

One Man Took Its Secret to the Grave. But the Little Engine That Could Change the World Continues to Fascinate—Or to Fool

Inventor Joseph Papp with his fabulous fusion machine in the 1960s. Over the next twenty years, investors would spend millions on what is either a miraculous breakthrough or an ingenious hoax.

David Ansley*

Copyright © 1989 *San Jose Mercury News*. All rights reserved. Reproduced with permission, from the August 27, 1989 "West" section.

This is going to sound loony, but: Sitting in the garage of a house in Daytona Beach, Florida, is an engine that just might be the closest the world has ever come to the miracle of cheap, clean energy.

Its inventor died in April. His followers fervently hope someone can figure out how to start the engine.

For the past twenty years they'd been trying to get him to reveal the formula for the mysterious fuel that made his engine run, or at least to give the machine a proper independent test. If he didn't leave his secret with someone, they can kiss goodbye the millions of dollars they spent nurturing this odd man and the engine they thought could change the world.

At first glance, this has all the elements of a perpetual-motion gimmick: Brilliant but quirky inventor Joseph Papp, a Hungarian immigrant with a mean case of paranoia. A wondrous dream machine that could run for thousands of hours on a few cents of fuel and produce no pollution. An apparently impossible power source in the fusion of helium atoms. Scores of devoted followers who elbowed each other aside in their eagerness to give him money, cars, houses.

But it's not so easy to prove this engine a scam. Too many sensible people helped him build it and run it. Too many engineers say they couldn't find a hamster inside. The U.S. government gave it two patents. Even famed physicist Richard Feynman couldn't debunk it—the best he could do was blow the engine up, which killed a man.

More than one person has suggested that if Joseph Papp doesn't deserve the Nobel Prize for physics, they should create for him a Nobel Prize for legerdemain.

I first crossed Joe Papp's trail in March, when the Utah cold fusion story had just broken. A couple of chemists had stunned the world by claiming to have fused hydrogen atoms in a jar of water.

Next day there were a couple of phone messages on my machine. One was from a guy who said he'd invented the same thing in 1986. He'd entered it in the Santa Clara

New Energy Times Archive

County Fair and won honorable mention. I tried to call him back, but the phone number he left had eight digits.

The next call was from a Jimmy Sabori. "Forget those guys in Utah," he said. "All they have is a glass of water. We have an engine."

I found Jimmy Sabori and his brother Jake in a gray warehouse in a corner of downtown San Jose. Tacked to the wall was a detailed blueprint labeled "Joseph Papp Thermonuclear Plasma Engine."

Over lunch they tried to explain the engine's principle and spun a tangled tale of intrigues, kidnapping, Navy tests, greedy partners, and lawsuits.

So could I see this engine run? Well, it was in Florida. It was out of fuel right now, and that's why they'd called me: They needed someone to put up $50,000 or so to make the fuel for a proper demonstration.

But I could take a videotape home and watch it.

I was caught up in their fascination. There on my TV was a large, quiet man standing in his garage as a three-foot-tall black engine beside him quietly chugged away, its flywheel spinning. He disconnected the starter batteries. It chugged on. He unbolted its frame from the wood floor and let it slide sideways—no wires coming up through the floor. He hooked it to a machine measuring RPM and horsepower and torque, and I guessed the readings were impressive.

Could this possibly be real? If so, how could it stay under wraps for so long?

In my search, which included two conversations with Papp before he died, I found that the Saboris were just the latest generation of investors and promoters strung across the country for twenty years.

Many of these people scarcely knew that the others existed. But they had spookily similar stories to tell, of seduction and disappointment, of investments forgotten but dreams that just wouldn't go away.

Don Roser, 62, is a building contractor. In 1968, one of his employees at a Gardena refrigeration company, Hungarian immigrant George Haley, invited Roser to dinner to meet fellow Hungarian Joseph Papp.

Papp was fascinating, spinning a tale of how he discovered an odd nuclear phenomenon. In Montreal he'd built a one-man submarine—he showed the book he'd written, *The*

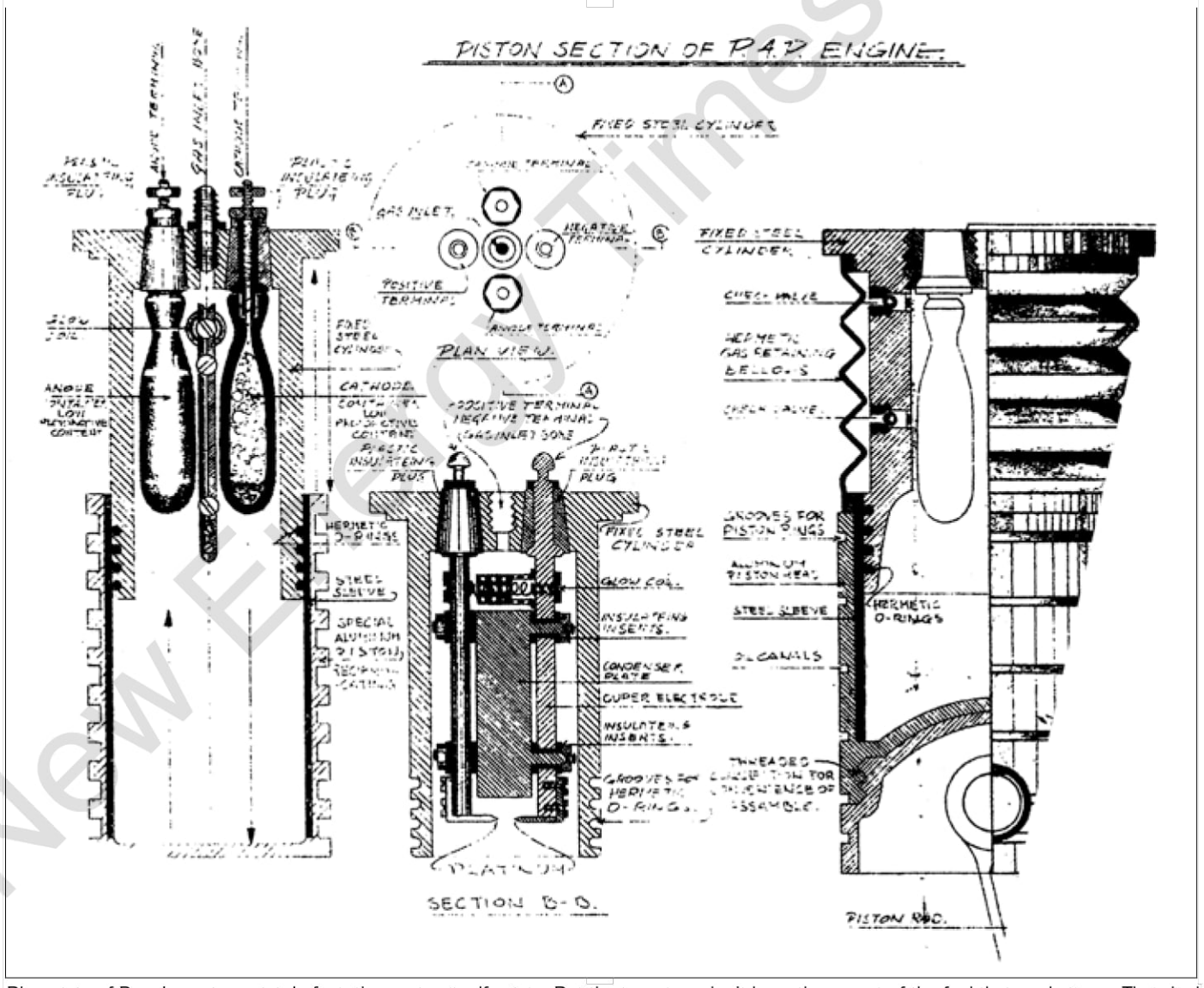

Blueprints of Papp's engine exist. In fact, the engine itself exists. But the investors don't have the secret of the fuel that made it run. That died with Papp last April [1989].

New Energy Times Archive

Fastest Submarine—that used his novel atomic power principle. And—he had the newspaper clippings—he'd disappeared one day in 1966 only to show up a couple of days later in a rubber raft off France, having raced his sub across the ocean at 300 mph. Where was the craft? It sank before he was rescued.

It took only three days for Papp to talk Roser into backing a new application of the mysterious power, a car engine modified so it could run for thousands of hours on a sealed charge of his fuel.

In a conventional engine, a few drops of fuel are mixed with air inside a cylinder and ignited with a spark. The explosion pushes down the floor of the cylinder—a piston—causing a shaft to turn. The remains of the burned gasoline are pumped out as exhaust.

Papp said his cylinders would need neither to breathe in any air nor to vent any exhaust. A load of fuel—enough for a year or so—would cost a few cents, and there'd be no pollution.

The fuel was an airy soup of inert gases—helium, neon, argon, krypton, xenon. Inside the cylinders, Papp said, the combination of a magnetic field, pinches of radioactive substances, and a well-timed spark would push the helium atoms so close together that a few would fuse together, releasing great energy, forcing the gases to violently expand and then contract again, over and over for thousands of hours.

Chemists and physicists reading this are shaking their heads. Atoms fuse only under the most intense duress. All the fuss about fusion this spring concerned hydrogen, the lightest of atoms. Even nuclear bombs cause hydrogen fusion for only a fraction of a second. Papp said he was fusing *helium* atoms. Even the center of the sun doesn't have the wherewithal to do that.

But Roser took a gamble, and he pushed Papp hard. The man was a good machinist, he worked incessantly, and "it was like he had done it before. He wasn't groping."

Papp began with an old four-cylinder Volvo engine. In six weeks, he had it running.

(The skeptic asks: What about the car battery that he used to start it? Couldn't that be turning the engine? No, Roser says, because the battery was wired through the starter, which wasn't turning. Besides, Papp often would disconnect the battery and let the engine run alone for a few minutes.)

In short order, Roser formed a joint company with Papp, hired armed guards and patent attorneys, and called in the press.

Roser's idea was to find a major engine manufacturer to develop and market the thing. He and Papp would own equal shares in the technology.

Big companies were interested: TRW, Lockheed, Rockwell. The Army and the Navy made inquiries.

Then came the clash. Roser wanted to put on a public demonstration. Papp was opposed. The old Volvo engine was rusted, he said. It might be dangerous.

Instead, he suggested a more impressive demonstration. One Sunday in October 1968 they trooped out to the desert with six or eight engineers and a homemade cannon, to be powered by Papp's invention.

The barrel was four feet long, four inches in diameter, made of 1/4-inch stainless steel and anchored in a concrete block. For the breech they used a spare cylinder head from Papp's engine; for a projectile they machined a piece of steel.

Papp filled the cylinder with his gases and hooked up the power. "We heard this tremendous explosion. It was a low rumble, like a bass sound," Roser says. The projectile had jammed halfway up the barrel and ripped the cannon in half. The back of the gun flared open like a tulip.

The observers were impressed. But if Roser was going to sell the engine to anyone, he needed to have it thoroughly examined. And he still wanted a public show. Papp objected again, but Roser was firm. He had seen Papp and his family standing next to the engine while it purred away; he doubted there was much danger.

The crowd that showed up one Monday in November 1968 included engineers, reporters and, Roser says, an attorney from TRW with a $3.5 million contract in his pocket. It also included a few students from Caltech and their professor: Richard Feynman, skeptic.

Feynman, who died of cancer last year, was a Nobel laureate physicist known to most Americans as the member of the Challenger investigation commission who used a glass of ice water, a C clamp, and a piece of rubber O-ring to cut through all the NASA double talk and dramatize what caused the shuttle explosion.

Feynman left a manuscript describing his encounter with Papp. He was convinced the engine was a fake before he'd even arrived. Once there, he took one look and charged that the cord delivering power to a control panel was running the engine. Papp pulled the plug, and the engine kept running. Feynman then figured there was a battery hidden inside the engine, so he held on to the plug a little longer, hoping the engine would run down.

Papp became frantic; the engine was running without any controls, he said.

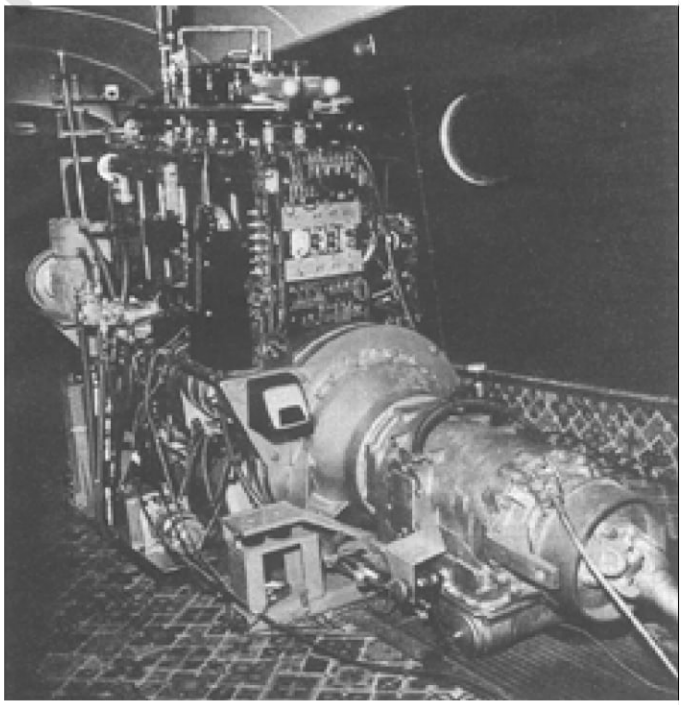

In the 1970s, Papp modified a Leyland six-cylinder truck engine and mounted it in an old school bus. Papp claimed that the engine could run for a year or so on a few cents worth of his secret fuel. There were plans to demonstrate Papp's solution to the energy crisis by driving the bus to the White House. But the engine never actually propelled the school bus.

New Energy Times Archive

Feynman relented and gave up the plug. Papp put it back in the socket right away and the engine blew apart.

"My back was to it," Roser says. "I knew what happened immediately because I heard that same rumble as when the cannon exploded. The guy I was talking to dropped in front of me. He had a piece of shrapnel go into the flesh around his skull."

A Mattel engineer died—a piston blasted through his gut. Eight others were badly wounded. The man from TRW nearly lost a leg; the contract was forgotten.

Papp's and Roser's partnership quickly fell apart; Papp wanted nothing more to do with Roser or the engine. Roser sued to get him back to work, but the case dragged on for years. Papp insisted Roser had been greedy, had tried to push the engine too far, had tried to steal the secret.

In the end, the judge gave Roser half the rights to the energy source. The engine, in the meantime, had won a U.S. patent. But none of that was much use to Roser, who had no idea how to make the fuel.

Roser now figures he spent half a million dollars on Papp, most of it in legal fees. For that, he got to watch the engine run maybe 30 hours altogether; the longest stretch was 35 minutes. Despite his low opinion of Papp, Roser still thinks the inventor had something.

Feynman figured, after the engine blew up, that Papp had loaded a cylinder with an explosive that would damage the engine and delay the formal test but that he miscalculated the charge.

Roser says the engine and the cannon were inspected by police and Stanford Research Institute for signs of a chemical explosion and that none was found. "They were perplexed by it."

Geza Szabo, 64, is chief engineer for a metal tube company in the Los Angeles area. Like many people I spoke with, Szabo assured me he was Papp's right-hand man during the years they were together. Unlike most of the others, he actually got grease on his hands, helping build a six-cylinder engine.

"For six years I worked with him every day, eight to ten hours. . .I know exactly how it's hooked up. I know how it works," Szabo says.

Does he believe in Papp's engine? No doubt. "I know it sounds incredible," he says. "Believe me, I'm no dummy. I have two engineering degrees and a truckful of common sense."

All this doesn't mean Szabo knew how to mix the fuel. With a dense thicket of pipes and hoses, vacuum pumps and ionizers, all flashing and hissing like a mad scientist's lab, Papp would produce a cylinder full of his gaseous mixture—as long as no one was watching closely. "I was so decent," Szabo says. "When he did mixing and ionizing, I walked out."

Papp's expatriate Hungarian friends also didn't know much about his background. Where he came from seems to have depended on when you asked.

The most likely reliable source I could find was Ohio car mechanic Joseph Tatrai, a friend from Papp's home town who decades later visited him in Florida.

Joseph Papp was born in 1933 in Tatabanya, Hungary, where his father was an electrician for a coal mining company, Tatrai says.

After school, Papp joined a "civilian" flying club, the first step toward being a military pilot. "He was a young chap then, a skinny little nothing. He had ideals and dreams but had no resources to develop these things," Tatrai recalls. "He was always a tinkering person." He went on to an elite air force academy, where he flew bombers and studied mechanical engineering.

Later he worked at a research institute that had something to do with atomic power. That's where, Papp later said, he first thought about trying to make a "mini-fusion" engine.

Then came the Hungarian uprising in 1956. Papp made his way in 1957 to Canada, where he met and married Helen Maczko, another Hungarian immigrant. They had their only child, Susan, in 1967, and a year later moved to California. Papp's family life looked uncomfortable to friends. "He lived in a very, very bad area, a small, tiny house. . .His wife was miserable," one says.

"An absolute loner, in spite of the family," Haley calls him. "He was an obsessed scientist, even a mad scientist—you can say that."

"He was, with all respect, a little flipped," Szabo says. Papp's emotions were intense and varied, to put it politely—"friction all over the place," Szabo recalls.

Depression, too: "He would talk about his misery, how he was so badly treated," says John Phillips, an attorney who spent years trying to repair Papp's and Roser's old partnership.

And paranoia, especially: "He was scared from his shadow," Szabo says. He feared the oil companies or the Mafia would come after him. "Nobody could explain that nobody wanted to shoot him."

In one of the depositions he gave during his suit with Roser, Papp left a glimpse of this. "I am a scientist and I try to fight for United States and I am willing to work with United States, you understand, because I lost my country. . . But you have to think who is the troublemaker and who tried to cut my throat."

His pride seemed on the line, too.

"He believed fervently that if he ever gave up the secrets, he would be totally out," Phillips says. ". . .If he lost that, nobody would ever be interested in Joe Papp."

Why did he work so hard at an engine he could never give up?

"He felt it was valuable. He knew it worked," Szabo says. "But he worked by this foggy belief that the trap, the danger, somehow, someday, would disappear. He kept on working, improving—oh, boy, working like a dog—filing, drilling, melting. . .But his mind said there always is a trap."

Working with Papp was exhausting, but the potential seemed to make it all worthwhile.

"If he'd trusted me," Szabo says, "I could have worked out the technical details and we would have been trillionaires."

Papp added them to his list of people who had tried to screw him.

Jim Adamson, 71, is an old hand at getting projects off the ground. For forty years he worked in San Diego for Convair, helping build airplanes and missiles.

He heard about Joe Papp through a friend who was Papp's latest lawyer. In June 1973 he invited Papp, Szabo, and Haley down from Los Angeles. He got his boss's OK to bring the engine down and test it.

Papp's new engine was a Leyland six-cylinder truck engine, heavily modified, with elaborate wires and gauges and gizmos.

Papp and friends had given it an unusual setting: inside an old school bus. Not under the hood—it was too big for that. The immense, gleaming engine sat on a gaudy carpet several feet behind the driver.

New Energy Times Archive

Papp's friends had concocted a plan where, with great flourish, they would fire up the engine (it had never actually propelled the bus) and drive the bus to the White House to show the world that the energy shortage was over.

Adamson persuaded them to quietly drive it down to San Diego for tests instead.

In August 1973, on the night before he was to make the drive, Papp disappeared. Two days later he was found wandering miles away, with a .22-caliber slug in his left shoulder, telling a story of being abducted, escaping, and being shot by someone who was after his secrets. No one was ever caught, and several people have always suspected Papp shot himself. If so, he did more harm than he intended. The nerve damage crippled his left hand.

It was almost a year and a half before Adamson could get Papp and the bus to San Diego. It was towed, not driven.

Adamson put the engine in an isolated building. To salve Papp's paranoia, he added a 24-hour plainclothes detail to Convair's already strong security. He assigned a confidential team of engineers and technicians to help Papp.

Adamson recalls that the inventor impressed the engineers who were watching him; most figured he was no fraud.

The engine was ringed with monitors, to capture whatever emanations—pressure, temperature, sound—it might produce. They even planned to weigh it before and after.

But Papp beat the system. Late on Easter Sunday he went into the lab alone, turned on a camera and started the engine about half a dozen times. People who have seen the videotape say the flywheel ran for several seconds each time. "Go, baby, go," Papp whispered.

It stalled. A piece of metal had slipped loose and gouged the inside of one cylinder.

After Adamson's crew fixed the engine, someone sabotaged Papp's fuel mixer. Papp and Haley blamed the same mysterious forces behind the abduction, but Adamson said it was impossible for anyone but those two men to have gotten to the lab undetected.

About a month later, Papp's wife, feeling abandoned and fearful up in Torrance, tried to kill herself and seven-year-old Susan by cutting their wrists. Papp dropped all his work and went back to his family.

Despite the inventor's blatant reluctance to run his engine under any scrutiny, Adamson is convinced he had something real.

"We took the engine apart" after it jammed. "There were no little mice running around in the treadmill. There was nothing in there, no external connections to anything we could find."

Besides, "when you got inside there and saw the damage that had been done in that cylinder, you would almost have to believe there was significant power there," Adamson says.

In fact, Adamson invested in the engine in its next incarnation.

Papp's recollection of the work at Convair? Someone tried to steal his secret from him.

Ernie Engel, 66, of North Platte, Nebraska, is "semi-retired" today. In the mid-1970s, Engel had just given up a lucrative career selling life insurance in the upper Plains and invested in a three-wheel automobile. At an auto show in Los Angeles in 1976, Joe Papp walked up. "He said, 'You've got a new type of car, and I've got a new source of power.'"

Papp showed his movies and told his stories.

Engel was impressed. He put down $100,000 for a license to put Papp's engines in his cars. It was to be the first of many $100,000 checks he wrote, on the behalf of himself and other Nebraska investors, who called themselves Energy Executives.

Energy Executives was given shares in a new corporation called Papp International, or rights to use the company's future engine in some application—irrigation pumps, trucks, cars. But because Papp owned 82% of the corporation, owning a share usually meant you had sent a check to him, to do with as he pleased.

Papp used the first Energy Executives check to buy a fine house in Santa Ana: two stories, four bedrooms, a swimming pool.

Then he left for six months in South Africa. His translator said Papp signed a corporation's $500 million contract—but then reneged, complaining that he didn't want to be under its control.

When Papp returned, the investors started shelling out more cash: for the parts to build six new, two-cylinder engines; for a secure fuel lab in a separate town under a different name; for a house-hunting trip to Florida when Papp decided to move; for the $350,000 Daytona Beach home itself; for a new Cadillac; for vacations to China and Hungary; for the patent lawyers' bills.

People noticed that Papp was collecting a lot of money from them and not doing much in return, but they don't seem to have questioned his engine, just his responsibility.

Finally the two-cylinder engine ran, on June 18, 1981.

A videotape of that demonstration was sent to the patent office to shore up the new engine's patent application, which was granted. (The office would nominate his engine as one of the year's best patents, but Papp refused to participate in the ceremony.)

Somehow Papp could never be persuaded to give the engine up for an independent test.

Engel finally got fed up, he says, when Papp accused him of breaking into his lab and snooping through his papers. Someone did break in, Engel says, but it wasn't him. He knew Papp would never leave his engine's secret where anyone could find it.

"I had it up to the eyebrows. I drove back to Nebraska and never went back down there."

Altogether, he figures $1.5 million went to Papp from him and his friends in

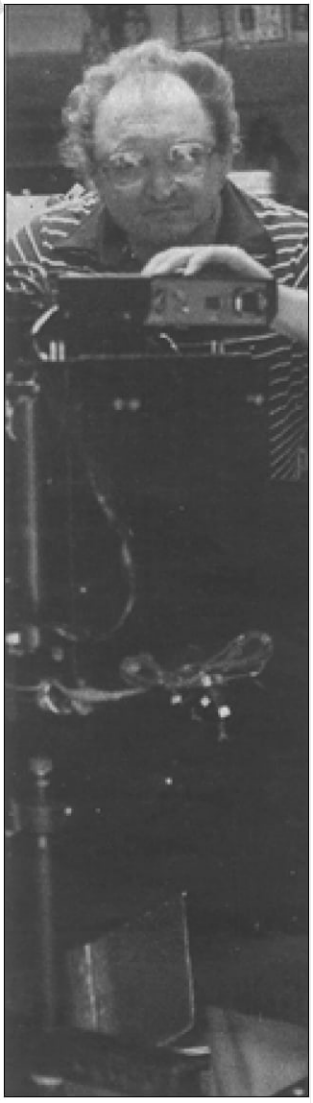

In the 1980s, Papp was still tinkering with the engine. But he vented the remaining fuel three months before his death.

New Energy Times Archive

Oklahoma. Roughly another $750,000 came from the investors in Nebraska.

Wasn't it a scam? "No, because the engine ran, no doubt about it. There were no secret valves. The engine was picked up and there were no hidden tubes going in, giving it fuel.

"I know Joe. Joe really had it."

Next up: Ken Dollar, of Tulsa, had been following Papp's progress since 1968, when a friend in California told him about the engine.

In late 1982, sensing that relations were strained between the inventor and the Papp International investors, he introduced Papp to Universal Power Concepts (UPC), a company that said it would market the engine.

The effort lasted for about five years before winding up in court. In the meantime, a new slate of investors wrote checks—by one estimate a million dollars worth, most of which Papp said he never received. No new engines were built. The one in Papp's garage ran countless times for would-be investors and for the experts they brought. But it never ran anywhere else, though it spent a couple years in a Tulsa testing lab waiting for the squabbling to settle down.

Dollar still is convinced. He ended up as president of UPC, which still stands to gain if the engine ever runs.

"He was the best con artist I ever met in my life," he says, but adds, "The engine wasn't a con. To have something that was real and still do the con game, that I never figured out."

One of his partners, Ralph Keen, an assistant U.S. attorney in Oklahoma, concurs: "I think I'm a reasonably intelligent person; I understand these types of things could very easily be fraud. I did everything within my power to assure it was not a fraud."

Jimmy Sabori, 59, and his brother Jake, 56, heard about Papp about seven years ago, when Jimmy was building windpower turbines.

The Saboris sent half a million dollars to UPC, they say, for what they thought would be franchises to use Papp's engine to generate electricity.

When no engine materialized—it was stuck in the Tulsa lab waiting for the tests that never came—they sued UPC to get their money back. But in July 1988, the judge instead ordered them to work with Papp to bring his engine to market. Jake hauled the engine back to Florida, rebuilt it with Papp, and watched it run. Then the Saboris went hunting for more investors, preferably people who would plunk down a few hundred thousand.

But the Saboris quickly discovered Papp's fundamental dilemma: He was reluctant to reveal his secret. He said he was tired of skeptics. He was especially unwilling to spell it all out for anyone, like a physicist, who could understand the concept and steal it.

Then things got worse: In January, Papp had to open the engine to repair it, venting the last of his fuel. The elaborate mixer, unused in several years, was worn out. Without $50,000 or so to build a new one, the engine could not run again.

In early April, I talked with Papp about this state of affairs by telephone. '"I now feel like giving it up. Forget it. It's like pushing the big wall," he said. "I spend 80% of my life to convince people it's true." But if he gave up, he said, he couldn't face his family.

"Every time anybody sees my engine they get all crazy and like to have the whole thing and think how they can get it."

He wanted to keep the secret of his fuel to himself, he said, and just sell the engines.

That wouldn't happen. A long-ignored pain in Papp's belly turned out to be colon cancer. Within two weeks, he was dead.

Bruce Crouse, 32, a plant manager for a company that makes wheel trim for General Motors and Nissan, married Papp's daughter, Susan, last November. When Papp died, his penniless widow turned to her new son-in-law.

Papp was barely in the ground before the phone and doorbell started ringing. Past investors, present partners, people who had always wanted to invest offered to help get the engine started.

Many people seem to figure that with Papp out of the way, there was a chance to get the engine running in public—assuming he left his secret with someone. But did he?

Crouse wasn't talking. He wanted to sort through the applicants and cut a quick deal with somebody, and he was holding his cards close to his chest.

The remains of Papp International—an Oklahoma dentist and a Nebraska farm-machinery manufacturer—insisted they had a backer and a plan, and that if Papp had left the answer anywhere, they owned it.

A former assistant, Mike Studley, hinted that he had learned the secret years ago. He had a six-month plan to get the engine running, which he would share with me if I held off on this story until he needed the publicity.

Another former investor, from Utah, showed up on Bakersfield television last month, with an endorsement from a California state senator, saying that Papp had sold the rights to him.

The Saboris, desperately short of money, say Papp entrusted them with copies of his papers. They don't understand the details themselves, but are reluctant to reveal the papers to anyone who could. They haven't resolved this dilemma any better than Papp did.

As I listen to the true believers wrangle over the relics, I get a strong suspicion that none of them will make the engine run—and that this will shake the faith of none of them.

What do I think? Well, I tracked down one more chapter in the Joseph Papp saga: his infamous atomic submarine.

For six years in Montreal, Joseph Papp's Hungarian friends watched as he spent all his time and money building his dream machine: a 28-foot, torpedo-shaped submarine that would use a secret atomic fuel to propel itself at high speeds.

Papp built the sub, of steel and aluminum, in a friends garage under strict secrecy. "Joseph didn't trust anybody, not even his wife," a friend said. In August 1966 it was completed; he showed it off to television reporters. A few days later, Helen Papp called the police to report that her husband and his submarine were missing.

French military authorities found Papp bobbing in a rubber raft off Brest, babbling about having crossed the ocean in eight hours.

Papp was the toast of two continents—until his story started falling apart. A man looking like Joseph Papp, and using his passport, had flown from Montreal to Paris the night Papp had disappeared. A Paris-to-Brest train ticket was in Papp's pocket when he was found.

The London Daily Mirror said Papp admitted it was a stunt, that he couldn't bear to admit to his friends that the submarine wouldn't work.

Less than two years later, he left for Los Angeles, with the idea of building his fusion-powered engine. In the interim, he obvi-

New Energy Times Archive

ously figured out what went wrong the first time. Either he perfected his engine—or he perfected his sleight-of-hand.

About the Author

As Science Editor of *Consumer Reports*, David Ansley is responsible for the magazine's coverage of health, medicine, and the environment and the coordination of the magazine's reports with the technical, advocacy, television, public information, and health newsletter divisions. Ansley earned his bachelor's degree (with distinction) in communication at Stanford University, where he served as Editor-in-Chief of *The Stanford Daily* in spring of 1978. Following graduation, he served internships with *The San Jose Mercury News* and with columnist Jack Anderson before joining the *Casper (WY) Star-Tribune* as a Reporter and Assigning Editor. He returned to *The San Jose Mercury News* in 1981 as Copy Editor, then Science and Medicine Editor, and finally as Medical Writer for the newspaper. In 1993 he was named Acting Director of the Knight Science Fellowships at MIT, where he served until September 1994 when he joined the staff of *Consumer Reports*. While at *The San Jose Mercury News*, Ansley's ten-part series on the health care crisis and its many causes won the American Medical Association's 1993 Medical Reporting Award in the large-newspaper category. Other feature articles by Ansley have appeared in *New Scientist*, *Technology Review*, *Science*, *Discover*, and *The Scientist*. Ansley was a contributor to *The San Jose Mercury News'* entry that won the 1990 Pulitzer Prize in general reporting for coverage of the Loma Prieta earthquake.

*E-mail: dansley@aol.com

Harnessing the Wheelwork of Nature: Tesla's Science of Energy

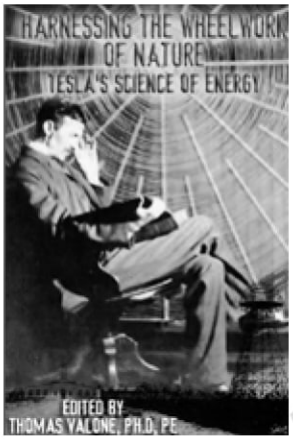

2002
Paperback, 338 pp.

Edited by Thomas Valone

Essays by experts in Tesla technology, selected Tesla patents, and more.

$19.95 North America
$24.95 Foreign

Order From:

New Energy Foundation, Inc.
P.O. Box 2816
Concord, NH 03302-2816

"LIBERTARIANS have all the good ideas."
—HUGH DOWNS, ABC NEWS
For Libertarian Party information, call toll-free or visit our web site.
800-ELECT-US ★ www.LP.org

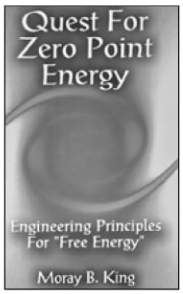

Quest for Zero-Point Energy:

Engineering Principles for "Free Energy"

by Moray King

2001, Paperback, 224 pages

$16.95 North America/$21.95 Foreign

Order From:

New Energy Foundation, Inc.
P.O. Box 2816
Concord, NH 03302-2816

2002, Paperback, 448 pp.

Bye Bye Big Bang, Hello Reality

A new book presents all the open questions about the Big Bang theory.

by William C. Mitchell

$21.95 North America
$26.95 Foreign

ORDER FROM:

New Energy Foundation, Inc. P.O. Box 2816
Concord, NH 03302-2816
Phone: 603-485-4700 / Fax: 603-485-4710
Online: www.infinite-energy.com

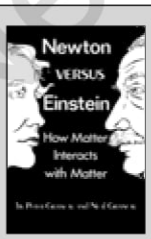

Hardcover, 219 pp.,
Published 1993

Newton Versus Einstein: How Matter Interacts with Matter

Peter Graneau and Neal Graneau

$19.95 North America / $26.95 Foreign

New Energy Foundation, Inc.
P.O. Box 2816 - Concord, NH 03302-2816

Call us at 603-485-4700 or visit us online at www.infinite-energy.com.

New Energy Finance Archive

The Papp Patents

Editor's Note: Joseph Papp applied for a U.S. patent titled "Method and Means for Generating Explosive Forces" on November 1, 1968 [Later granted as U.S. #3,680,431, August 1, 1972 and assigned to Environetics, Inc. of Gardena, California], the day after he applied for his first patent. In this patent, the inventor declares the general nature of the noble gas mixture necessary to produce explosive release of energy. He also suggests several of the triggering sources that may be involved. This is the most stripped-down of Papp's patents and should be—and *has been*—the starting point for investigating the basic Papp process. There is little doubt that Papp is not offering full disclosure here, but there is no doubt that others who have examined this patent and followed its outline have already been able to obtain explosive detonations in noble gases. This shows that a potential military technology can be offered up for all to see, yet for over three decades—as far as we know—there occurs no official recognition of its military implications, not to mention the enormous civilian uses of exploding noble gases! *Caution:* Anyone who undertakes to duplicate this process must be *very* careful about safety issues. Because of its importance, we reprint this patent in full.

On Halloween (October 31) in 1968 Joseph Papp applied for his first U.S. patent. It was less than two months before the first manned spacecraft, Apollo 8, would orbit the Moon and the Vietnam War was at its height—just to set the historical context. The patent application, "Method and Means of Converting Atomic Energy into Utilizable Kinetic Energy," was later granted as U.S. #3,670,494, June 20, 1972, and assigned to Environetics, Inc., Gardena, California. We present only some of the introductory material and figures for the patent, to give the flavor of the engine technology that Papp was putting forth (the full patent is, of course, available from a variety of Internet sources). Some of the ideas in this patent Papp had not implemented himself—such as the metal bellows configuration for sealing in the allegedly electrically-triggered exploding gases. Much of this patent strikes one as lots of obfuscation and hand-waving to conceal the central requirements of making such an engine work.

On September 4, 1980, Josef Papp applied for U.S. patent, "Inert Gas Fuel, Fuel Preparation Apparatus and System for Extracting Useful Work from the Fuel," later granted as U.S. #4,428,193, January 31, 1984, and assigned to Papp International, Inc. of Lincoln, Nebraska. This is a very lengthy patent, filled with many insights about how his sealed, non-cooled engine process may have worked. If this was an overt scam by Papp against his investors, it was a needlessly elaborate one that opened up many places for the scam purveyor to be caught. As bizarre as it may seem to be, the simpler explanation is that the engine—whether properly revealed or not in the patent—actually worked. Again, we provide only some of the introductory material in the patent. —*EFM*

METHOD AND MEANS FOR GENERATING EXPLOSIVE FORCES
U.S. PATENT #3,680,431 (Issued August 1, 1972)

Inventor: Josef Papp, San Pedro, California
Assignee: Environetics, Inc., Gardena, California
Filed: November 1968
Appl. No.: 772,653

References Cited
United States Patents

2,783,684	3/1957 Yoler
2,899,864	8/1959 Bloxsom, Jr.
3,086,424	4/1963 Liao

Primary Examiner: Reuben Epstein
Attorney: Miketta, Glenny, Poms, and Smith

Abstract
A method of generating explosive forces involving the triggering and utilization of potential energy of atoms and various forms of radiation and emanation; the provision of environmental means in which the reaction can be initiated by electrical means. The utilization of elements of relatively low atomic number, such as the noble gases, chlorine and other elements and their isotopes whose atoms do not have their outer quantum levels completely satisfied with orbital electrons, in the production of explosive reactions in which fission, spallation, transfer reactions and cascade effects appear to be utilized. The utilization of elements having the property of emitting electrons, alpha gamma and beta radiations, X-ray and ultraviolet emanations for the purpose of triggering the reactions.

Method and Means for Generating Explosive Forces
This invention is directed to a method of generating explosive forces by the utilization of relatively inexpensive chemical elements and their isotopes, the reactions being triggered by radiations and emanations from other elements (which radiations and emanations may be stimulated by the application of electrical energy), the reactions taking place almost instantaneously with the liberation of a tremendous amount of energy. Various mechanisms involving fragmentation of atoms and nuclides, spallation, fission, cascade effects, etc. are believed to take place. One of the advantages of the present invention is that the elements employed are readily available, do not require the utilization of uranium or plutonium and do not result in radioactive products having the potential dangers of previously known explosive charges utilizing atomic energy.

Briefly stated, the present invention employs a trapped volume of a mixture of gases, preferably noble gases such as argon, krypton, neon, xenon and their isotopes, since these gases do not burn, do not contain or produce acid containing materials which deleteriously affect containers and are sensitive to and respond to radiations. These and other gases and elements from periods 2, 3, 4 and 5 of the periodic table whose atoms do not have their outer quantum levels completely satisfied with orbital electrons, and whose electron distances permit electron connections, are capable of being utilized. Isotopes of the above are often capable of internal electron conversion readily and are also effective. Chlorine is an example.

The invention also contemplates the utilization of ele-

New Energy Times Archive

ments adapted for use in activating the reaction. Elements used in the cells are preferably those capable of emitting electrons, alpha rays, beta rays, gamma rays and X-rays; negative beta rays are particularly useful. Example of elements adapted for use in these cells include rubidium, red and white phosphorous, mesothorium, radium and other elements which decay by the emission of negative beta particles and which are also subject to rearrangement within the atom or decay by orbital electron capture. Similarly, atoms which exhibit alpha particle emission can be employed.

An advantage of the present invention lies in that most of the elements employed are readily available and inexpensive; they are not dangerously radioactive. The explosive charge of gases need not be under a pressure exceeding 3 or 4 atmospheres. The charge is stable, will not burn and is unaffected by changes in temperature. The explosive is detonated by supplying the activating cells and electrodes within the charge with current at a voltage and amperage which is readily obtainable from a small generator.

Among the objects of this invention I list:

1. The utilization of noble gases and similar elements as herein disclosed in the production of explosives.

2. The utilization of noble gases and elements capable of activating said gases as herein disclosed.

3. A method of generating explosive forces within a chamber containing a volume of a mixture of gases by subjecting the gases to radiations and emanations of electrons, beta rays, gamma rays, alpha rays and X-rays and an electrical discharge.

4. To disclose and provide certain exemplary forms of arrangements employing the method whereby the method may be effectively utilized in the generation of explosive forces both for industrial purposes (as in mining, the formation of underground caverns for the recovery of shale oil, hydrocarbon gases, etc.) and in military purposes, the method being particularly adapted for use in space as well as under the seas and on land.

5. To disclose and provide exemplary compositions, proportions and conditions under which the method may be carried out.

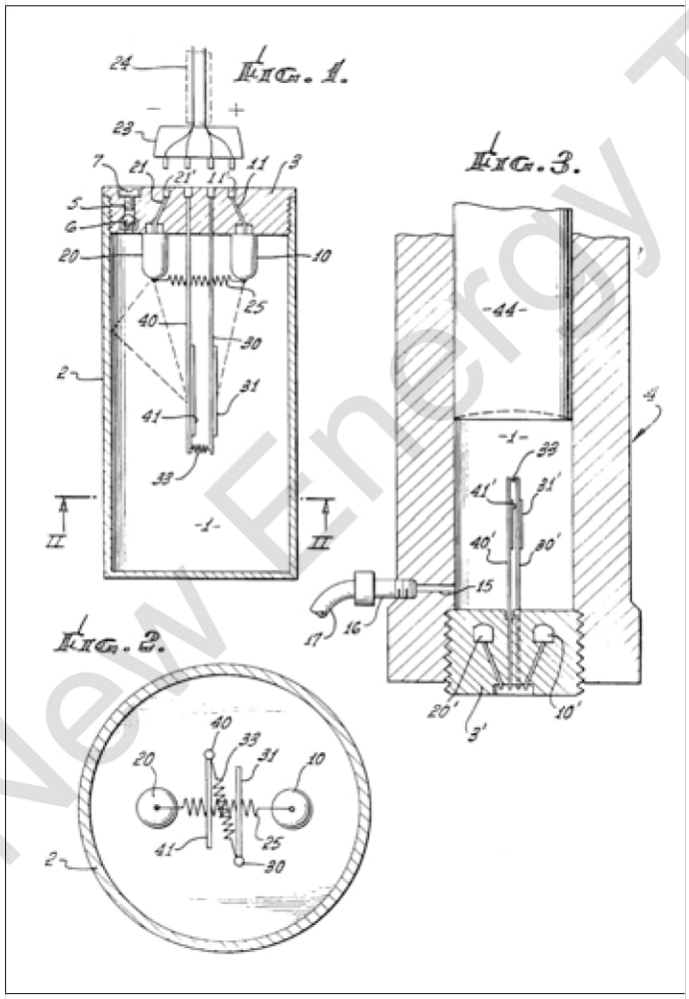

Other advantages will readily occur to those skilled in this art from the following description. For purposes of illustration and to facilitate understanding, and without limitation thereto, certain exemplary forms of arrangements in which the method may be carried out will be described by reference to the following drawings in which:

Figure 1 is a somewhat diagrammatic longitudinal section through a canister or charge chamber in which the explosion may take place; Figure 2 is a transverse section taken along the plane II-II in Figure 1; Figure 3 is a diagrammatic longitudinal section taken through a breach portion of a gun barrel in which the method of the present invention may be employed in generating an explosive force adapted to eject a missile from such barrel.

The form of device illustrated in Figures 1 and 2 has many uses, but is particularly well adapted for use in mining, in cracking underground formations to facilitate the recovery of oil or make underground oil shale beds release oil, etc. The device there shown includes an external, cylindrical housing 2 provided with a base 3 and having an enclosed end so as to provide a substantially gas-tight chamber 1. Affixed to the base 3, interiorly of the housing are a pair of activating cells 10 and 20 spaced from each other; each of these cells is hollow and contains a quantity of an element capable of emitting the desired radiations of the character hereinbefore referred to. These hollow cells may be made of stainless steel, duraluminum, or aluminum alloys containing zinc, antimony and cesium. The quantity of rubidium, phosphorous, mesothorium, radium or other elements capable of emitting electrons, alpha rays, beta rays, gamma rays, X-rays etc. may vary with the size of chamber 1 and the effect desired during explosion. Preferably, the cells contain the elements in an atmosphere of argon. The base of each cell is electrically connected as at 11 and 21 to a female electrical connector such as 11′ and 21′ carried by the base and adapted to receive the male current supplying jack of a suitable plug 23.

Extending into the chamber 1 from the base 3 is a pair of spaced electrodes 30 and 40, each of these electrodes carrying a capacitor plate 31 and 41 respectively approximately in the central portion of the chamber. The capacitor plates may be made of any suitable metal, such as aluminum, and may be suitably spaced by means of one or more small, dielectric spacers so as to permit the mixture of gases within the chamber to readily pass between the capacitor plates. The inner ends of the two electrodes 30 and 40 are connected as indicated at 33 by means of a coil of wire capable of becoming incandescent when supplied with current. Wolfram is eminently suited for this purpose. The ends of the electrodes within the base 3 are

New Energy Times Archive

also connected to suitable female terminals adapted to cooperate with contact points of a plug indicated at 23 of a cable 24.

The device illustrated also indicates the inner ends of the cells 10 and 20 as being connected by another coil 25 of thin wire which normally would not glow or become incandescent under the loads to which coil 33 is subjected, but which will become incandescent in the event a larger current is supplied to the device.

The base 3 is also shown provided with an injection port 5 and a removable exterior plug or closure 7, which, when removed, permits the injection of a charge of mixed gases into the chamber past a check valve 6. In practice, it is desirable to purge the interior of chamber 1 or to partly evacuate it before injection of the mixture of gases being employed.

Typical gas compositions which have been employed in these charges comprise:

Argon	between about 40% and 60%
Neon	between about 6% and 8%
Xenon	between about 30% and 40%
Chlorine	less than 1%
Deoxygenated Water	less than 1%

When the chamber 1 had a volumetric capacity of about 15.5 cubic inches, one of the cells may be charged with 3 grams of rubidium and the other cell can be charged with 4 to 5 grams of phosphorous. Extremely efficient explosive charges may be obtained by the use of smaller quantities of mesothorium in one cell and radium in another. In a specific test in which a 15-1/2 inch cubic charging chamber was employed, the two capacitor plates were each 1/8 inch thick by 1-1/8 inch wide by 2-1/2 inches long and were spaced one fourth inch apart. The heating coil 33 in that instance was made from a 2-1/2 inch length of wolfram about 0.03 inches in diameter. The cable 24 was connected to a small generator supplying 35 volt AC at 1-1/2 amperes. One of the cells and one of the electrodes (such as 10 and 30) were connected to the positive AC line and the other cell and electrode were connected to the negative side. When the switch was closed to supply the current to the charge, explosion occurred virtually instantaneously.

It will be evident from the above description that a device such as illustrated in Figures 1 and 2, can be securely fastened to its cable and lowered down a bore hole to explode at any desired depth. The thickness of the walls of the housing 2 may be varied in accordance with the effect desired and the direction in which the force of the explosion is needed. Since the contents of the chamber are normally at a pressure of less than three (generally between 1 and 3) atmospheres, a thick and heavy wall is not required during shipment and placement. Devices of the character described hereinabove may also be used in artillery, cannon and naval guns to propel missiles. By making the housing strong and providing the end away from the base with a suitably shaped nozzle, the charge may be caused to generate a tremendous, directed thrust.

Figure 3 illustrates one adaptation of the method and means of the present invention to use in artillery. As there diagrammatically shown, the two cells 10′ and 20′ are shown formed within and adjacent the front face of a breach block 3′ at the rear end of a gun barrel 4. The two electrodes 30′ and 40′ with their capacitor plate and coil assembly, are shown removably attached to the inner face of the breach block 3′ and the conductors leading to the rearwardly positioned contact terminals. The gun barrel is provided with an injection port 15 and a suitable fitting 16 which may include one or more check valves, said fitting being connected to a high pressure injection line 17 and a proportioning pump which may rapidly feed a predetermined volume of premixed charging gases into the chamber 1 formed within the rear of the gun barrel between the breach block 3′ and a shell or projectile generally indicated at 44. An arrangement as diagrammatically illustrated here permits replacement of the electrodes, capacitor. and coil, the activating cells 10′ and 20′ having a long life. It may be noted that the radiations and emanations from the elements contained in the cells 10′ and 20′ will readily penetrate 1 inch of armor plate when suitably excited by the current supplied when detonation is desired.

The primary function of coil 33 is to heat the gases; in the event this coil fails for any reason, coil 25 can be relied upon to cause detonation by supplying such coil with a current of higher voltage and amperage.

Rays and electrons from the cells, under the stimulated and accelerating effect of the electric current and heat, impinge upon the electrons and nuclei of the gaseous components and their velocity is greatly increased thereby and by the heat generated by coil 33. Collisions, structural changes and alterations apparently take place causing changes in the gas atoms which culminate upon the discharge of the capacitor in a combination of nuclei and the liberation of an enormous amount of energy. Although all of the theoretical aspects of the mechanism which takes place in the chamber is not completely understood at the present time, the fact remains that by the use of the elements, proportions, arrangements and conditions here disclosed, explosive forces of great value and utility may be generated. By changing the form of the chamber, as by elongating it and initiating the wave at one end of the chamber, low brissance effects can be obtained. Those skilled in the manipulation of detonating charges will have no difficulty in adapting the mode of operation of the present invention to many uses and adaptations. All modifications coming within the scope of the appended claims are embraced thereby.

I claim:

1. A method of generating explosive forces which comprises: positioning at least one pair of spaced capacitor plates in a virtually gas tight chamber, each of said capacitor plates being provided with a conductor communicating with the exterior of said chamber; providing a coil of heat resistant material between said conductors within the chamber, said coil being adapted to become incandescent when said conductors are supplied with electrical current insufficient to discharge the capacitor plates; positioning a pair of activating cells, each containing an element having the ability to emit radiations from the group including alpha, beta, gamma, ultraviolet and X-rays within effective range of the capacitor plates; injecting a mixture of gases into said chamber, the major proportion of said gases being composed of noble gases and elements whose atoms do not have their outer quantum levels completely satisfied with orbital electrons; and supplying said cells and conductors with electrical current to accelerate the radiations from said cells, heat the entrapped gases and load the capacitor to discharge the same and generate an explosive atomic reaction in said chamber.

2. A method as stated in claim 1 wherein the capacitor plates

New Energy Times Archive

are spaced from each other to permit said gases to circulate therebetween.

3. A method as stated in claim 1 wherein the mixture of gases contains xenon, argon and neon.

4. A method as stated in claim 1 wherein the mixture of gases contains from about 40 percent to about 60 percent of argon, from about 30 percent to about 40 percent xenon, and from about 6 percent to about 8 percent of neon.

5. A method as stated in claim 1 wherein the elements contained in said cells are from the group of phosphorous, rubidium, mesothorium, radium and their isotopes.

6. A method as stated in claim 1 wherein said coil is made of wolfram and is adapted to become luminous before the capacitor discharges through said gases under the influence of the current supplied.

7. A method of generating explosive forces which comprises: injecting and trapping a mixture of gases at a pressure not above about 4 atmospheres in a substantially gas tight chamber, the major proportion of said gases being composed of noble gases and elements whose atoms do not have their outer quantum levels completely satisfied with orbital electrons, and their isotopes; bombarding said gases with radiations from cells containing elements having the ability to emit radiations from the group including alpha, beta, gamma, ultraviolet and X-rays by stimulating radiation from said cells by supplying the cells with electric current from an external source; permitting said gases to circulate between spaced capacitor plates positioned in said chamber; and supplying electric current to said capacitor plates to detonate said mixture of gases.

8. A method as stated in claim 7 wherein the mixture of gases contains from about 40 percent to about 60 percent argon, from about 30 percent to about 40 percent xenon, from about 6 percent to about 8 percent neon, and small quantities of chlorine and water.

9. A method as stated in claim 1 wherein one of said cells contains an element of larger atomic mass than the other.

10. A detonating device comprising a gas tight housing enclosing a chamber containing a pair of capacitor plates in parallel planes spaced to permit movement of gases therebetween, each of said plates being provided with a positioning conductor terminating exteriorly of said housing; a pair of activating cells in spaced relation with respect to each other and to said capacitor plates, each cell containing an element having the ability to emit radiations from the group including alpha, beta, gamma, ultraviolet and X-rays, each of said cells being provided with a conductor terminating exteriorly of said housing; sealable means for injecting a mixture of gases into said chamber the major proportion of said gases being composed of noble gases and elements whose atoms do not have their outer quantum levels completely satisfied with orbital electrons, and means for stimulating radiation from said cells including means for supplying alternating current thereto.

11. A detonating device as stated in claim 10 wherein the ends of the positioning conductors, removed from the cells, are connected by a coil adapted to become luminous under the influence of an electric current supplied to said positioning conductors.

12. A method as stated in claim 1 wherein the mixture of gases contains from about 40 percent to about 60 percent argon, from about 30 percent to about 40 percent xenon, from about 6 percent to about 8 percent neon and small quantities of chlorine and deoxygenated water, and the elements contained in the cells are in an atmosphere of argon.

13. In a detonating device, the combination of: a gas tight housing enclosing a chamber containing a pair of capacitor plates in parallel planes spaced to permit movement of gases therebetween, each of said plates being provided with a positioning conductor terminating exteriorly of said housing; an atmosphere, in said chamber, composed of a mixture of noble gases and elements whose atoms do not have their outer quantum levels completely satisfied with orbital electrons, a pair of activating cells in spaced relation with respect to each other and to said capacitor plates, each cell containing an element having the ability to emit radiations from the group including alpha, beta, gamma, ultraviolet and X-rays; each of said cells being provided with a conductor terminating exteriorly of the housing; and means for supplying electric current to said cells and positioning conductors.

METHOD AND MEANS OF CONVERTING ATOMIC ENERGY INTO UTILIZABLE KINETIC ENERGY
U.S. PATENT #3,670,494 (Issued June 20, 1972)

Inventor: Josef Papp, San Pedro, California
Assignee: Environetics, Inc, Gardena, California
Filed: October 31, 1968
Appl. No.: 772,077

References Cited
United States Patents

2,532,096	11/1950	Hartley
2,548,708	4/1951	Dickey
1,916,235	7/1933	Ruben

Primary Examiner: Martin P. Schwadron
Assistant Examiner: Robert R. Bunevich
Attorney: Miketta, Glenny, Poms, and Smith

Abstract

Method of utilizing potential energy of atoms and various forms of radiation (electrons, photons, positrons, gamma beta and alpha radiations, etc.) in a controlled power generating system, effective mixtures of chemical elements adapted for use in the method; the preparation of charges of ingredients for use in virtually gas-tight power generating devices, the activation and control of such charges and devices; structural requirements of power generating devices utilizing the methods and compositions.

Method and Means of Converting Atomic Energy Into Utilizable Kinetic Energy

This invention is directed to a source of energy such as an engine wherein the energy is derived from rearrangements within an atom or atoms. Since such rearrangements are reversible, the utilization of suitably charged elements or atoms which are capable of rearrangement permits the conversion of potential energy into kinetic energy over very long prolonged periods of time with a single charge of atoms or ele-

New Energy Times Archive

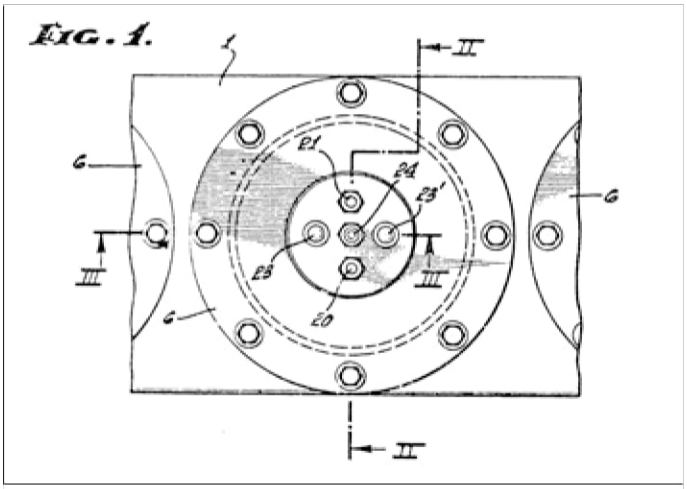

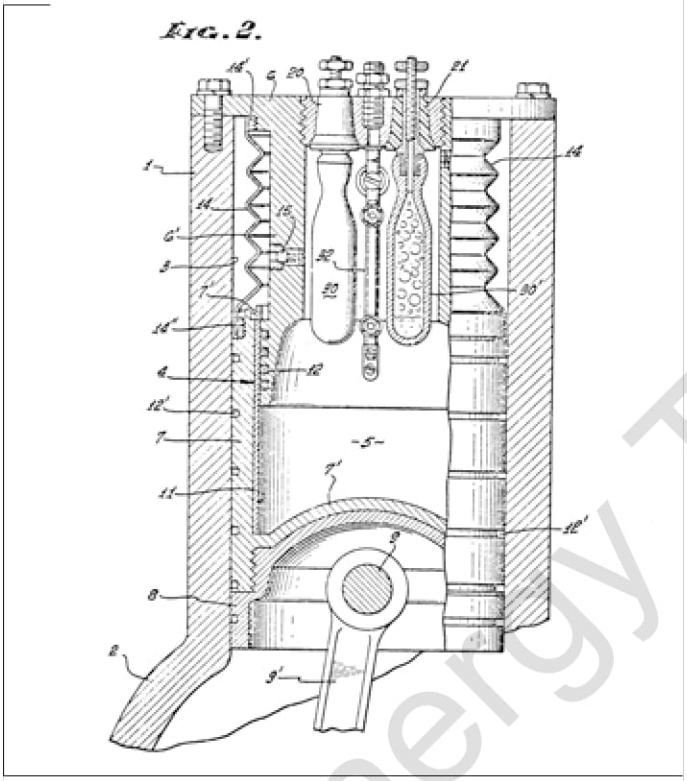

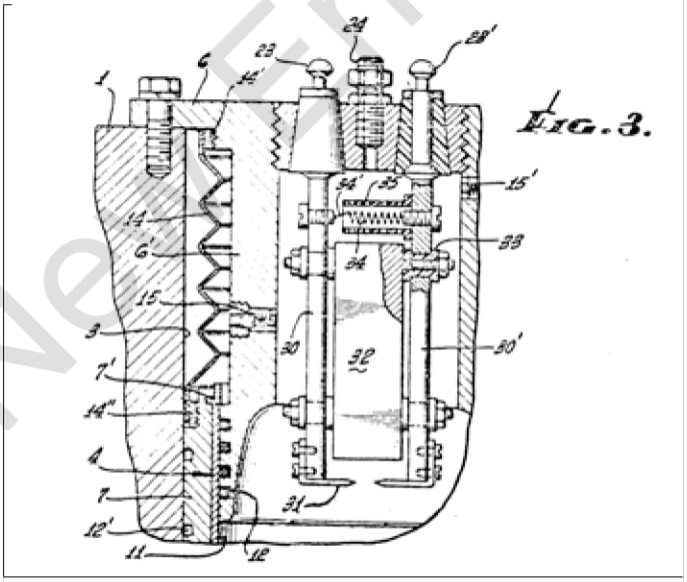

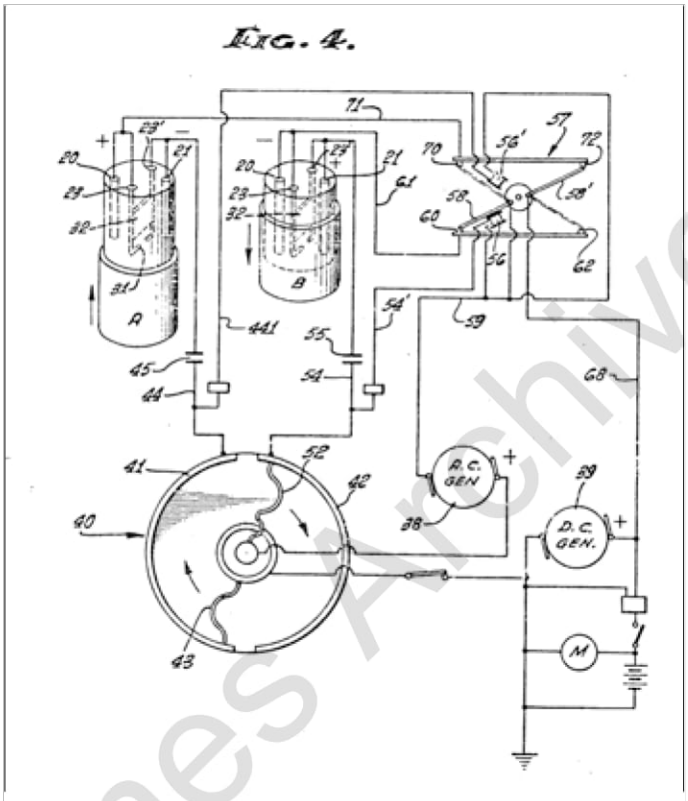

ments of suitable composition. The invention is postulated upon the premise that when a substance is exposed to conditions under which the absorption of energy is possible (as by the use of suitable electric charge or discharge), the electrons which are in their lowest energy or ground state take up energy and pass into the states of higher energy or excited state. The return of electrons to the lower state liberates energy. By the use of atoms of suitable electronic configuration and by the periodic subjection of such atoms to an electric charge or discharge, the electrons may be caused to rapidly move from one arrangement into another thereby permitting the utilization of the energy liberated by the movement of the electrons from one orbit or energy level to another.

Under the conditions here described, the quantum yield is maintained high and by maintaining the radiation above the level at which the molecules stay intact, the electronic energy is utilized as heat. This is attained, in part at least, by the use of substances capable of emitting gamma and beta rays and electrons, and the generation of visible light and fluorescence whereby large numbers of photons are made available. These substances and conditions, together with cyclic changes in magnetic field, polarity and potential supplied to activating cells to stimulate radiation, and cyclic generation and condensation of vapors in a trapped volume of noble and other gases capable of existing in higher energy states, produce expansion and contraction or condensation of such trapped gases in a controlled cyclic manner, the energy thus produced being capable of use in generating power which can be converted into rotative or linear forces.

Since theorists in quantum mechanics may come to conflicting opinions and explanations of the same observed results, applicant will state facts and observations and describe an operative and tested embodiment without excessive discussion of theory, applicant being willing to adopt that explanation of some aspects of oper-

New Energy Times Archive

ation which will stand the test of time. Data contained in this application was largely derived from a document prepared by applicant in the Hungarian language and translated to English by a person who was not knowledgeable in science or the subject matter.

Among the objects of this invention, I list:

1. To provide a virtually sealed telescoping chamber of variable volume provided with a precharged energy supply having a long life, and composed essentially of noble gases and substances capable of emitting beta and gamma rays and electrons, said chamber being capable of forcibly expanding and contracting in volume under the influence of electrical timing to thereby be used as a source of controlled energy and power.

2. To provide a two cycle reciprocating engine which does not use fuel intake valves or exhaust valves, does not require an air supply and does not emit exhaust gases.

3. To provide a precharged engine of the character stated in item 2 capable of generating power for a period of from 2,000 to over 10,000 hours continuously or until mechanical breakdown without the addition of fuel, injection of air or discharge of gases.

4. To provide a low temperature system of converting potential energy into kinetic energy.

5. To provide a system or method of generating power by the use of mixtures of gases and substances (referred to in item 1) wherein the reactions are cyclic and under control.

6. To disclose and provide the elements and components, molecular and atomic fuel compositions; and method of preparation and operation which exemplify the teachings of this invention.

The invention may be utilized in many fields of endeavor for many industrial, scientific and military purposes, both terrestrial, in space and under water. For purposes of illustration and to facilitate understanding, an exemplary reciprocating engine will be described by reference to the following drawings in which: Figure 1 is a top or plan view of a single cylinder (of an in-line assembly) of an engine embodying aspects of this invention; Figure 2 is a transverse section taken along the plane II-II in Figure 1, some parts being in partial elevation; Figure 3 is a section taken along the plane III-III of Figure 1; Figure 4 is a diagrammatic representation illustrating one form of an electric supply and timing control system.

INERT GAS FUEL, FUEL PREPARATION APPARATUS AND SYSTEM FOR EXTRACTING USEFUL WORK FROM THE FUEL
U.S. PATENT #4,428,193 (Issued January 31, 1984)

Inventor: Papp; Joseph, Santa Ana, California
Assignee: Papp International Incorporated, Lincoln, Nebraska
Appl. No.: 184,405
Filed: September 4, 1980

References Cited
United States Patents

2,169,844	8/1939	Marshall, Jr.
2,590,168	3/1952	Felici
3,386,245	6/1968	Gamage
3,549,490	7/1970	Moore
3,670,494	6/1972	Papp
3,680,431	8/1972	Papp
3,977,191	8/1976	Britt
4,023,065	5/1977	Koloc
4,081,712	3/1978	Bode *et al.*

Foreign Patent Documents

2056199	5/1972	Fed. Rep. Of Germany

Other References
-*Essentials of Astronomy*, (7/68) Motz *et al.*, p. 394.
-*Condensed Chemical Dictionary*, 9th ed., Hawley Ed., VanNostrand Reinhold Co., New York, pp. 431 and 621.
-*New Scientist* (5/24/79) pp. 626-630.

Primary Examiner: Sal Cangialosi
Attorney: Senniger, Powers, Leavitt, and Roedel

Abstract
An inert gas fuel consisting essentially of a precise, homogeneous mixture of helium, neon, argon, krypton and xenon. Apparatus for preparing the fuel includes a mixing chamber, tubing to allow movement of each inert gas into and through the various stages of the apparatus, a plurality of electric coils for producing magnetic fields, an ion gauge, ionizers, cathode ray tubes, filters, a polarizer and a high frequency generator. An engine for extracting useful work from the fuel has at least two closed cylinders for fuel, each cylinder being defined by a head and a piston. A plurality of electrodes extend into each chamber, some containing low level radioactive material. The head has a generally concave depression facing a generally semi-toroidal depression in the surface of the piston. The piston is axially movable with respect to the head from a first position to a second position and back, which linear motion is converted to rotary motion by a crankshaft. The engine's electrical system includes coils and condensers which circle each cylinder, an electric generator, and circuitry for controlling the flow of current within the system.

Background of the Invention
This invention relates to closed reciprocating engines, *i.e.* ones which do not require an air supply and do not emit exhaust gases, and more particularly to such engines which use inert gases as fuel. It also concerns such inert gas fuels and apparatus for preparing same.

Currently available internal combustion engines suffer from several disadvantages. They are inefficient in their utilization of the energy present in their fuels. The fuel itself is generally a petroleum derivative with an ever-increasing price and sometimes limited availability. And the burning of such fuel normally results in pollutants which are emitted into the atmosphere. These engines require oxygen and, therefore, are particularly unsuitable in environments, such as underwater or outer space, in which gaseous oxygen is relatively unavailable. Present internal combustion engines are, furthermore, relatively complex with a great number of moving parts. Larger units, such as fossil-fuel electric power plants, escape some of the disadvantages of the present internal combustion engine, but not, *inter alia*, those of pollution, price of fuel and availability of fuel.

Several alternative energy sources have been proposed, such as the sun (through direct solar power devices), nuclear fission

New Energy Times Archive

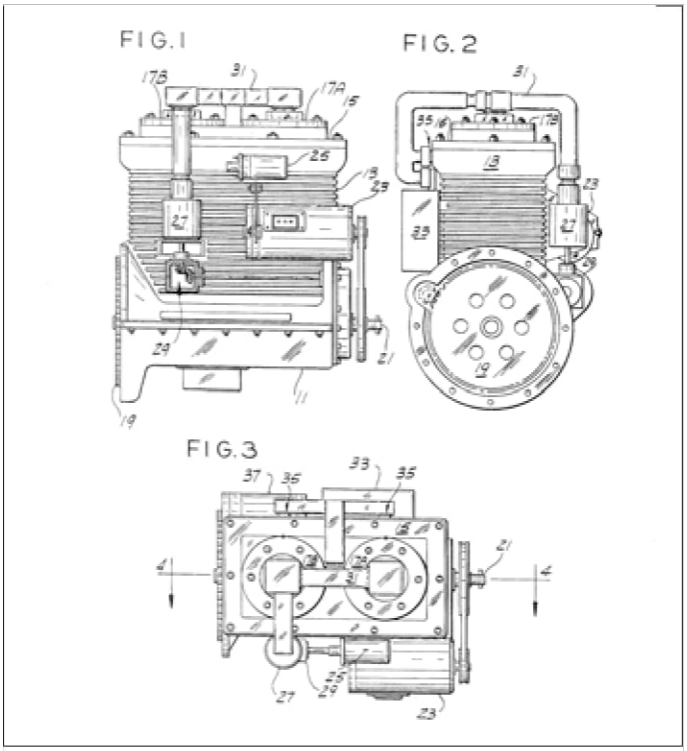

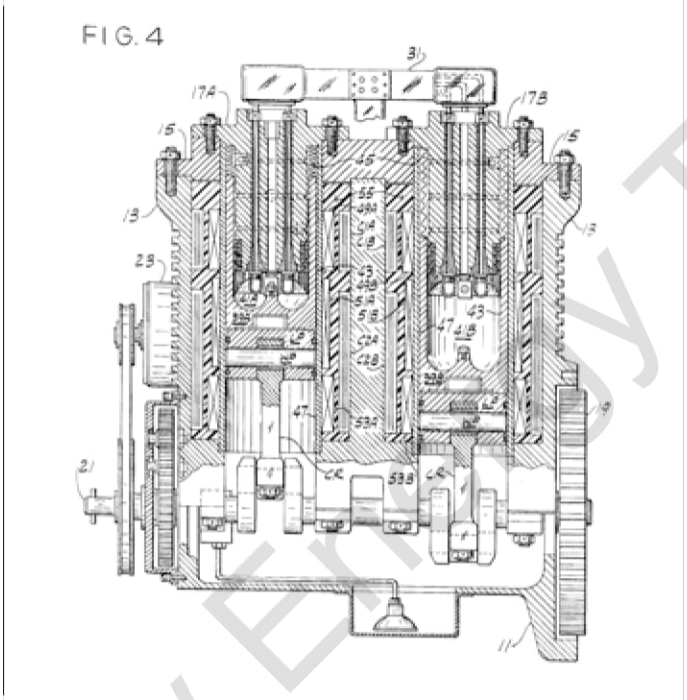

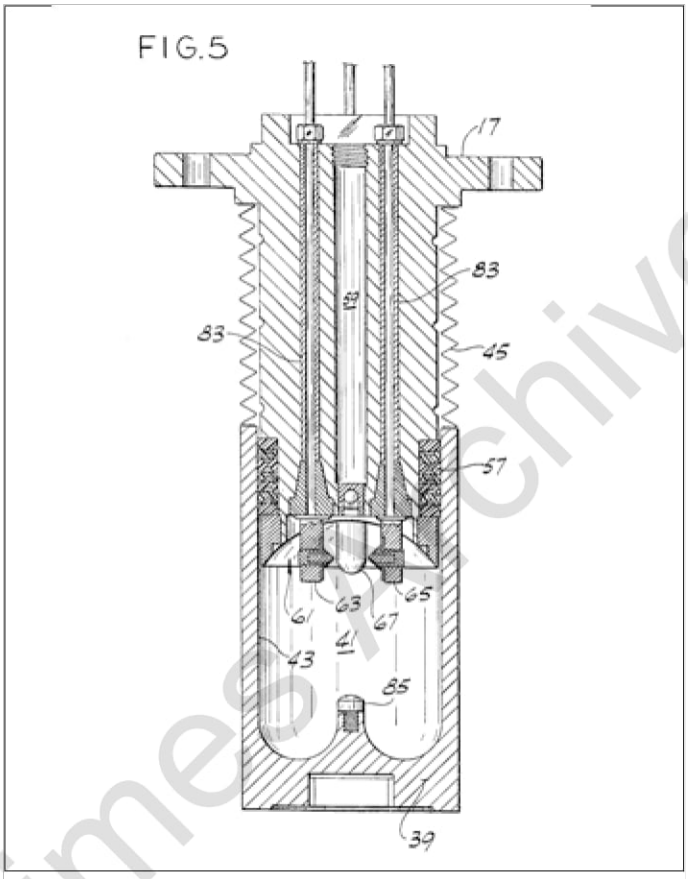

and nuclear fusion. But because of lack of public acceptance, cost, other pollutants, technical problems, and/or lack of development, these sources have not wholly solved the problem.

Moreover, the preparation of fuel for nuclear fission and nuclear fusion reactors has heretofore been a complicated process requiring expensive apparatus.

Summary of the Invention

Among the several objects of the present invention may be noted the provision of an engine which is efficient; the provision of an engine which does not require frequent refueling; the provision of an engine which develops no pollutants in operation; the provision of an engine which is particularly suited for use in environments devoid of free oxygen; the provision of an engine which requires no oxygen in operation; the provision of an engine having a relatively small number of moving parts; the provision of an engine of a relatively simple construction; the provision of an engine which can be used in light and heavy-duty applications; the provision of an engine which is relatively inexpensive to make and operate; the provision of a fuel which uses widely available components; the provision of a fuel which is relatively inexpensive; the provision of a fuel which is not a petroleum derivative; the provision of relatively simple and inexpensive apparatus for preparing inert gases for use as a fuel; the provision of such apparatus which mixes inert gases in precise, predetermined ratios; and the provision of such apparatus which eliminates contaminants from the inert gas mixture. Other objects and features will be in part apparent and in part pointed out hereinafter.

Briefly, in one aspect the engine of the present invention includes a head having a generally concave depression therein, the head defining one end of a chamber, a piston having a generally semitoroidal depression in its upper surface, the piston defining the other end of the chamber, and a plurality of electrodes extending into the chamber for exciting and igniting the working fluid. The piston is axially movable with respect to the head from a first position to a second position and back, the volume of the chamber being determined by the position of the piston relative to the head.

In another aspect, the engine of the present invention includes a head which defines one end of the chamber, a piston which defines the other end of the chamber, a plurality of magnetic coils wound around the chamber for generating magnetic fields inside the chamber, and at least four electrodes extending into the chamber for exciting and igniting the working fluid. The piston is axially movable with respect

New Energy Times Archive

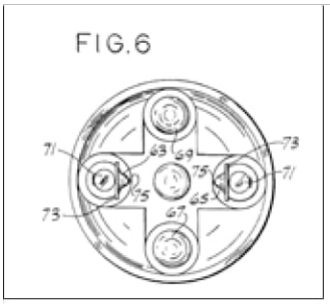

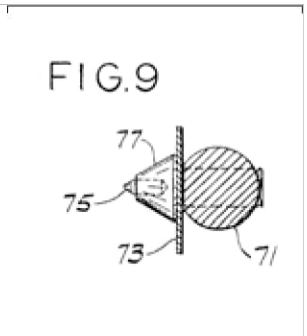

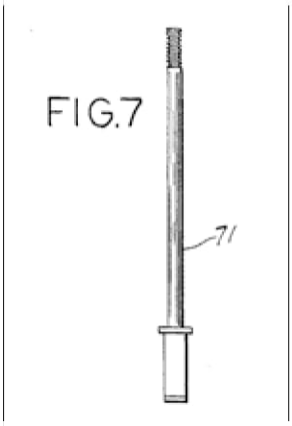

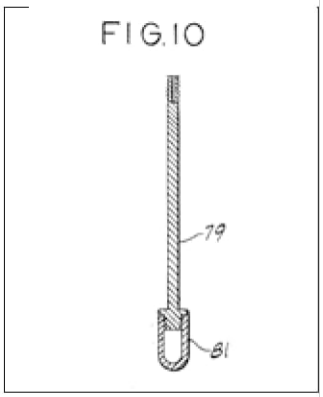

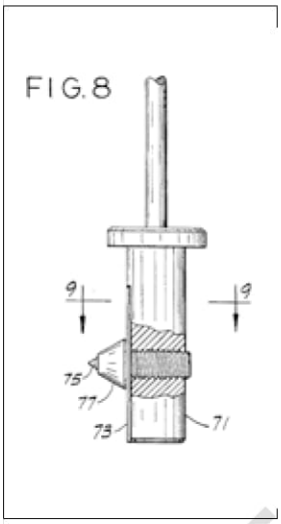

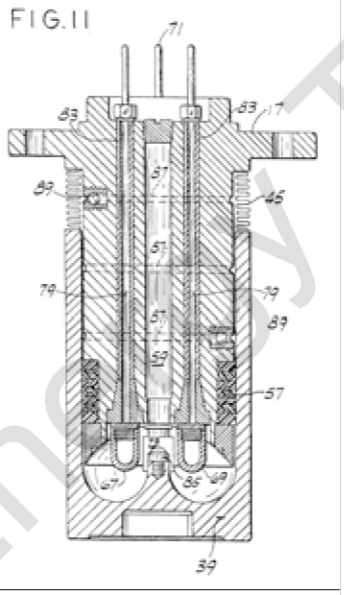

to the head from a first position to a second position and back, the volume of the chamber being determined by the position of the piston relative to the head. The magnetic coils are generally coaxial with the chamber. The electrodes are generally equidistantly spaced from the axis of the chamber and are each disposed generally 90 degrees from the adjacent electrodes. Lines between opposed pairs of electrodes intersect generally on the axis of the chamber to define a focal point.

In a further aspect, the engine of the present invention includes a head which defines one end of a chamber, a piston which defines the other end of the chamber, at least two electric coils wound around the chamber for generating magnetic fields inside the chamber, and a plurality of electrodes extending into the chamber for exciting and igniting the working fluid. The piston is axially movable with respect to the head from a first position to a second position and back, the volume of the chamber being determined by the position of the piston relative to the head. The electric coils are generally coaxial with the chamber. And the working fluid includes a mixture of inert gases.

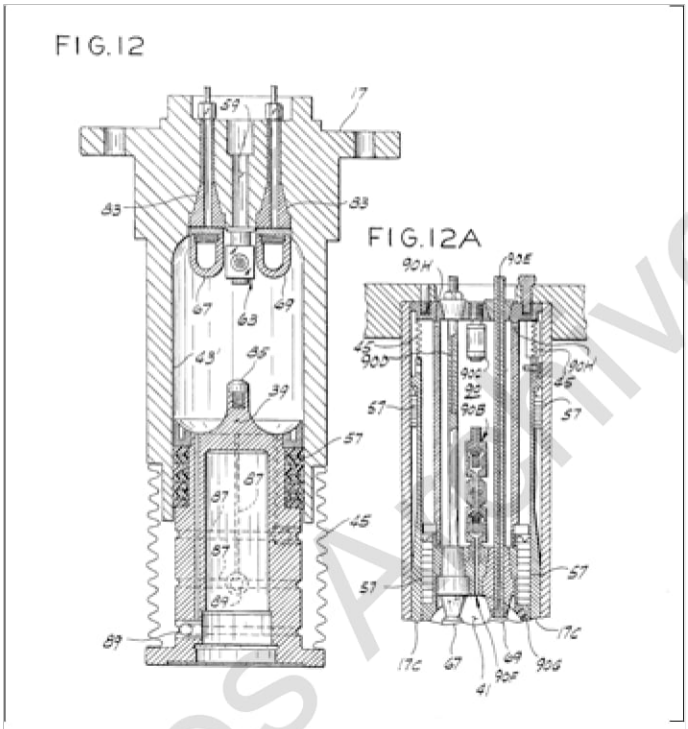

The apparatus of the present invention for preparing a mixture of inert gases for use as a fuel includes a chamber, electric coils for generating predetermined magnetic fields inside the chamber, tubing adapted to be connected to sources of preselected inert gases for flow of the gases from the sources to the chamber, and ionizers for ionizing the gases.

The fuel of the present invention includes a mixture of inert gases including approximately 36% helium, approximately 26% neon, approximately 17% argon, approximately 13% krypton, and approximately 8% xenon by volume.

Brief Description of the Drawings

Figure 1 is a side elevation of an engine of this invention; Figure 2 is a rear elevation of an engine of this invention; Figure 3 is a top plan of an engine of this invention; Figure 4 is a cross-sectional view generally along line 4-4 of Figure 3 of an engine of this invention; Figure 5 is a cross-sectional view of a cylinder of an engine of this invention; Figure 6 is a plan of the base of a cylinder head of an engine of this invention; Figure 7 is an elevation of an electrode rod of an engine of this invention; Figure 8 is an elevation, with parts broken away, of one type of electrode used in an engine of this invention; Figure 9 is a view taken generally along line 9-9 of Figure 8; Figure 10 is a cross-sectional view of a second type of electrode used in an engine of this invention; Figure 11 is a cross-sectional view similar to Figure 5 showing the piston in its uppermost position; Figure 12 is a cross-sectional view similar to Figure 5 showing an alternative cylinder used in an engine of this invention; Figure 12A is a cross-sectional view similar to Figures 5 and 12, but on a reduced scale and with parts broken away, showing an additional embodiment of a cylinder head used in an engine of this invention. [Figures 13A-20F are not shown here.] ❐❐❐

New Energy Times Archive

Mr. Papf's Perpetual-Motion Machine

Richard P. Feynman

This essay was originally published in LASER, the journal of the now-defunct Southern California Skeptics. It later appeared in The Skeptical Inquirer (Fall 1989), and has widespread internet distribution. It is only fair to the memory and intent of Richard Feynman that his complete testimonial be provided, which opposes other views expressed in this issue of Infinite Energy.

One time [in 1966] [Editor's Note: This date is wrong; the accident occurred in November 1968.] some students came over to my house with one of those magazines about automobiles—*Roadrunner*, or something like that. In it there was an article about a marvelous new engine that works on a new principle for getting power, and it's really quite remarkable. You don't have to buy fuel for the car; the fuel is injected into the cylinders when the engine is manufactured and lasts for about six months. Then you have to bring it back to have it recharged. The engine is air-cooled and can make a car run 60 miles per hour on the freeway.

There was a picture of the engine and its inventor, Mr. Joseph Papf [Editor's Note: Another error.], who had come to the United States from Hungary. He's standing next to the engine, making measurements on it with a panel full of dials. Various people had looked at the engine and made various remarks about it in the article.

Mr. Papf was going to demonstrate his engine in Los Angeles, and the students wanted me to go along with them to see it. I told them nothing has enough power to go for six months like that, unless it's a nuclear reactor, which it surely is not. "Fakes are always coming out," I said, "and the guy's probably trying to get investors to invest in his engine."

Then I told them some stories about perpetual-motion machines, such as the one in a London museum that was in a glass case. It had no wires connected to it, yet it turned around and around. "You have to ask yourself, 'Where is the power supply?'" I said. In that case, it was some air coming up through a little tube installed in one of the wooden legs holding up the glass case.

The students talked me into going along with them to see the demonstration. It was held in a refrigerator company's parking lot, an L-shaped area. The engine was down at one end of the lot, while the people, about 30 or so, were at the bend of the L, some distance away. Mr. Papf talked about how the motor worked, using vague and complicated phrases about radiation, atoms, different levels of energy, quanta, and this and that, all of which made no sense whatsoever, and would never work.

But the rest of what he said was important, for every fraud has to have the right characteristics: Mr. Papf explained that he had tried to sell his engine to the big automobile companies, but they wouldn't buy it because they were afraid it would put all the big oil companies out of business. So there was obviously a conspiracy working against Mr. Papf's marvelous new engine. Then there was a reference to the magazine articles, and an announcement that in a few days the engine was going to be sent to the Stanford Research Institute for validation. This proved, of course, that the engine was real. There was also an invitation to prospective investors to get in on this great opportunity to make large amounts of money, because it was very powerful. And there was a certain danger!

There were quite a few wires running from the engine down to where Mr. Papf and the spectators were standing and into a set of instruments used for measurement; these included a variac, a variable transformer with a dial that could put out different voltages. The instruments were, in turn, connected by a cord to an electrical outlet in the side of the building. So it was pretty obvious where the power supply was.

The engine started to go around, and there was a bit of disappointment: the propeller of the fan went around quietly without the noise of an ordinary engine with powerful explosions in the cylinders, and everything—it looked very much like an electric motor.

Mr. Papf pulled the plug from the wall, and the fan propeller continued to turn. "You see, this cord has nothing to do with the engine; it's only supplying power to the instruments," he said.

Well, that was easy. He's got a storage battery inside the engine. "Do you mind if I hold the plug?" I asked.

"Not at all," replied Mr. Papf, and he handed it to me.

It wasn't very long before he asked me to give him back the plug. "I'd like to hold it a little longer," I said, figuring that if I stalled around enough, the damn thing would stop.

Pretty soon Mr. Papf was frantic, so I gave him back the plug and he plugged it back into the wall.

A few moments later there was a big explosion: A cone of silvery uniform stuff shot out and turned to smoke. The ruined engine fell over on its side.

The man standing next to me said, "I've been hit!"

I looked at him, the whole side of his arm was torn open, you could see all the muscle fibers, tendons—everything. I helped him over to a chair to sit down.

The youngest student in the group knew what to do. "Make a tourniquet out of a tie for that man!" he told me. He gave orders to everybody, and began to give artificial respiration to another man who was lying on the ground. It was really quite wonderful to see this young student take over with all those grown men around.

By the time the paramedics came, we realized that there were three men injured, the one lying on the ground most seriously: he had a hole in his chest (so the artificial respiration wasn't effective) and he ultimately died. The other two men survived. We were all shaking.

I turned to the young man who had been so capable in coping with the unexpected tragedy. "I don't usually drink," I said, "but let's go over to a bar and have a drink to calm our nerves."

New Energy Times Archive

We went into a bar and ordered a drink. I was surprised to discover that the young man who had been the most mature of all was underage—he couldn't get a drink.

We started to talk about the engine. One man, an investor who had brought an engineer with him to see the demonstration, said, "My engineer advised me to stand mainly behind the corner of the building and just peer out during the demonstration, because these new engines are sometimes 'dangerous.'"

Somebody else pointed out that Mr. Papf had previously done some work with rockets, and the explosion looked like fuel when it goes off.

My idea was that had Mr. Papf sent his engine to the Stanford Research Institute as announced, the game would have been up in a few days. Therefore an explosion just big enough to destroy the engine would keep the game going a little longer; it would show the tremendous power of the engine, and, most important, it would provide a reason for investors to put more money into the project, now that the engine had to be rebuilt. We all agreed that the explosion was much larger than Mr. Papf probably intended.

After such an explosion with the resulting fatality and injuries, there was, of course, a lawsuit. Mr. Papf sued *me* for ruining his engine, charging that my stalling around with the cord caused him to lose control of it. Caltech has a legal department to protect its errant professors, so they talked to me. I told them I thought he didn't have much of a case: he would have to prove how the engine worked, and he'd have to demonstrate that, in fact, taking the cord off *caused* the explosion.

The case was settled out of court, and Mr. Papf was paid something. I guess there's a certain amount of wisdom in not going to court, even when you're right, but I cost Caltech a certain amount of money by going to that demonstration. I still think I correctly diagnosed what was happening with a reasonable probability.

And, of course, nothing has been heard of Mr. Papf's new engine since. ❐❐❐

Blast Kills Bayan: Test Engine in Explosion

Dick Rosengarten and Jim Fendell

Reprinted with permission from the South Bay Daily Breeze (California), November 19, 1968.

A Torrance man was killed Monday when an engine—described by its inventor as atomic powered—exploded during a demonstration near Gardena. Dead on arrival at a Gardena hospital was Jack Edward Hartman, 40, of 3837 231st Place, Torrance. He represented Mattel Toys of Hawthorne at the engine test. He is survived by his wife, Eileen.

Three other persons were seriously injured and four were treated for cuts and bruises. More than 75 persons witnessed the demonstration at Environetics, Inc., 15321 S. Broadway, in county area near Gardena.

In fair condition this morning at Memorial Hospital of Gardena was Joe J. Quagletti, 52, of 511 Via del Monte, Palos Verdes Estates. He suffered an injury to his left shoulder. He is a representative of Industrial Realty.

Also in fair condition was Harold M. Childers, 48, of 8812 Anchorage Drive, Huntington Beach. Childers was representing TRW Systems of Redondo Reach. He suffered a compound fracture of the left leg.

Robert C. Bogert, 49, of 5439 Round Meadows Drive, Hidden Hills, was admitted to the hospital with foreign bodies in his scalp. He was in satisfactory condition. He is a representative of North American Rockwell Co.

Treated for a heart ailment and then released was John Y. Takaguchi, 67, of 1035 Dewey Ave., Los Angeles. Treated for cuts and bruises were: Del Linam, 36, a television cameraman, of 133 S. Ardmore Ave., Los Angeles; Bobbie J. Keyes, 39, of 10602 Lesterford Ave., Downey. He is a representative of B&H Piano Movers; Jerry J. Halton, 66, of 99 Skyline Drive, Burbank. He is with Halton Associates; John P. O'Donnell, 32, a Gardena newspaperman, of 2324 El Contento Drive, Hollywood.

The inventor of the engine, Joseph Papp, 35, described what happened just before the explosion: "The motor had been running for about 10 minutes when someone came up to me and accused me of perpetrating a hoax." The Hungarian-born inventor said the person picked up an extension line connecting the engine to a 24 volt power source and disconnected it.

Papp said the engine began to slow down, but did not stop. Before reconnecting the engine Papp said he told persons watching the demonstration to back up. Papp said when he connected the engine to the power source the engine exploded, sending metal parts flying in all directions.

Power Method Unveiled

The engine which exploded near Gardena Monday was a Volvo block specially modified to operate without a conventional source of fuel. It derived its power from an electro-chemical reaction which used relatively small amounts of electricity as might be produced by an automobile generator, as a catalyst.

According to an article in the current issue of *Private Pilot* magazine, the engine operates on a charge of gas sealed into each cylinder of the modified motor block. A charge of low voltage electricity is then introduced to each cylinder in turn, causing the gas to expand, and forcing the piston down. At the same time the secret blend of gases turns into a form which allows it to be compressed by an up-stroke of the piston. The up-stroke is forced by the revolution of the crankshaft, just as in a standard automobile engine.

The engine, according to the inventor, Joseph Papp, was capable of producing "between 50 and 75 horsepower per cylinder" at 4,000 revolutions per minute. If an engine were to be designed specifically for this new power system, much more horsepower might be developed.

According to a chemist at El Camino College, the gas probably used was an inert gas, such as is found in an ordinary electrical light bulb. The effect of an electrical current property applied to a compressed amount of this gas would cause it to expand. The expansion would be due to the addition of electrons to the gas mixture, putting it in a more "excited" state. The direction of expansion could then be controlled by means of magnetic fields.

The description of the engine as "atomic powered" is a reflection of the manner in which the gas is forced to expand by electrical bombardment, rather then any relationship to a nuclear-powered engine which would contain radioactive material.

New Energy Times Archive

Witness to the Papp Engine Explosion: An Interview with Cecil Baumgartner

July 3, 2003 via phone link between Glendora, California and Pembroke, New Hampshire

There has been much mis-information about the explosion of one of Joseph Papp's engines in Los Angeles on November 18, 1968. A widely-circulated description of this tragic event by the late Nobel laureate Richard P. Feynman (reprinted elsewhere in this issue, p. 29, for reference purposes) is the source of the problem. Feynman's description of the explosion was neither accurate nor complete. Certainly Feynman's "investigation" of the engine that killed one person and severely injured three other people was remarkably shoddy. This seminal explosion event again demonstrates that a preconception that some scientific or technological claim *must* be *a priori* bogus or fraudulent will often lead astray even a great human being such as Richard Feynman. We have tried, but have been unable to locate even a shred of information that *any* investigation into this accident by official bodies came up with evidence of conventional explosives surreptitiously placed within the engine—one "explanation" offered by Feynman. If there had been a determination of the presence of chemical explosives by Papp or his associates, surely this would have become known to Feynman and the Caltech authorities, which settled with Papp out-of-court according to Feynman—for damages that were, in part, due to Feynman's actions. If evidence of illicit explosives had been found, it is inconceivable that Feynman and others would not have touted that information widely. Papp almost certainly would have been subject to criminal prosecution. Therefore, one is left with the distinct impression that this engine explosion of November 1968 was a profound, albeit tragic, substantiation of Papp's claims to have discovered a remarkable source of new energy, which he had tamed. The only other reasonable explanation is that the authorities investigating the explosion were exceedingly incompetent.

My interview with engineer Cecil Baumgartner, who was an eyewitness to the Papp engine explosion, in his capacity as a representative of the TRW aerospace corporation, suggests that the Papp story is far larger and more important than the cartoon version of the event purveyed by pathological skeptics. Though this interview may be lengthy, we believe that its rich content merits the space we give it. —Eugene F. Mallove

Eugene Mallove (EM): To begin the interview, I would like to ask you about your background. Please give me some idea of when you were born and what your general interests in life have been, and your professional experience. This is, in general, to give the readers of *Infinite Energy* an idea of the quality of you as a witness to the Papp events of the mid-1960s.

Cecil Baumgartner (CB): I'd be happy to. My memory may not recall all of the pertinent data instantaneously. However, I was born September 4, 1920 in Burr Oak, Indiana; it's about seventy miles southeast of Chicago. I went to school at Burr Oak for several years and then we moved down to central eastern Indiana in 1936. I graduated from high school in New Lisbon, Indiana. After graduation, I wanted to go to college but didn't have the funds. I did farm work for three years or so and I transferred out to Iowa looking for farm work and was successful. I told my employer, a farmer, that I would like to continue my education. . .I went to business college in Marshalltown. I saved up my few dollars a week that I made farming and paid my tuition and went there for a couple of years. While I was going to business college, the people that I stayed with had meshed with the Fisher Governor Company and they got me a job there and I worked as a machinist for over a year. I stopped that, put more time in on my business college, but at that time I had become age 21 and decided that I had better enlist in the Navy to avoid the draft that they were putting out at that time in 1941. December 3, 1941 I joined the Navy. December 7, 1941 you know what happened. The Navy sent me to the clerical school in San Diego. I completed that and they put me on a destroyer. The destroyer went to the North Pacific in the Bering Sea in the Aleutian Islands. . .They transferred me to Dutch Harbor to a cruiser, the USS Detroit. Dutch Harbor is in the Aleutian Islands. That was the one that was hit by the Japanese back in 1942. They attacked Dutch Harbor.

Photo by James Baumgartner.

Cecil Baumgartner

EM: Many people don't know that there was an actual attack on the mainland.

CB: Anyway, I didn't get back to Seattle. I was only on the cruiser for about three weeks. There was an opening for my rating on the Admiral's staff, which everyone deferred. I was the last one on and I volunteered, and they transferred me to the Admiral's staff, which was the best thing that ever happened to me. We went down to Adat [an island in the Aleutian chains]. It was an island that the Japanese hadn't gotten to yet. They had occupied others. . .

EM: All of this substantiates, in my opinion, that you have, as a man of about 83, a very good memory.

CB: I'll be 83 in September. . .At that time they had started the V12 Officer Training Program and I had applied for that and my grades were such that I qualified and managed to get aboard. They sent me to the university of my choice, which was Perdue University, in the Fall of 1943. . .I requested engineering and in two semesters we found that, well, my perform-

New Energy Times Archive

ance in math and physics weren't high enough for me to go ahead on that course, so they put me back into what they call their tech force training program and transferred me to DePaw University. While I was at DePaw my grades were fair enough there and they opened up openings for the Naval Air Service and I qualified for that, so instead of going for a commission, I went into preflight training. They sent me to Patuxent River, Maryland and I was there for three months and I found myself at the University of Georgia at a preflight school there. This was 1945 now. So three months in the University of Georgia until the month of September 1945, at which time the atomic bomb was dropped and they started closing down the program and I had been in the service long enough and had enough points that I could option out, so I did and I went back to Perdue. I finished my aeronautical engineering degree at Perdue in 1948. In the meantime, when I was my two semesters at Perdue, I came across this beautiful co-ed, which I married, which was against the rules. We had to keep a rather low profile and that was part of my option out. When I joined the Navy, I had joined for six years but when I went in the preflight training program, they discharged me from the regular Navy and listed me in the Reserves. So being a reservist, I could option out. I didn't have to serve my full six years. I did just about four years maybe. So, I graduated from Perdue in June 1948. Actually, I hadn't quite completed my degree. They faulted me on one program, one course, so I had to make that up so then they listed me as graduating in August 1948. But in the meantime I had gone to work for Curtis-Wright in Wood Ridge, New Jersey; I was an engine testing junior engineer.

EM: So you tested engines at Curtis-Wright?

CB: Aircraft engines; we had reciprocating and turbo jet and jet engines. We were testing those. After a year in that, they cut back on the program and they transferred me to the rocket division, which was in Caldwell, New Jersey. I was there a year and I made a mistake. I volunteered an efficiency [suggestion] in handling the fuels that they were firing the rockets with. . .So anyway, I subsequently found a job with a textile manufacturing company in Patterson, New Jersey and I worked there for a couple of years. Then I got hired back into the Wood Ridge plant [of Curtis-Wright], back into the jet engine program. . .After doing the engine tests and working up the hydraulics, they transferred me to the research division at my request and the research division was doing some nuclear work and I got in on the nuclear. I was with the jet engine, which at that time they were revising the British "Olympus" jet engine, and I was in the Aircraft Nuclear Propulsion Program. We were designing and analyzing systems for the reactor on an aircraft. Also we had worked on a radiation project. We had a food irradiator that we did analysis on.

GM: That must have been cobalt-60 perhaps?

CB: Yes. We had a nuclear fuels program, [in] which the elements were classified; we couldn't discuss what we did. I got in on the process of hot pressing these fuel elements for the Pluto Program. It was a nuclear-powered air vehicle. The Pluto engine was like a ramjet.

GM: Right, using a nuclear reactor as a heater.

CB: Yes. A nuclear reactor was the heater and it was an air passage. We had a beryllium oxide program on that for the moderators at the structure for containing the fuel element. I supervised the processing, the manufacturing, of those elements. We hot-pressed beryllium oxide to somewhere between 2,500 and 3,000°F. We made conduction furnaces and we processed the material in and we gained considerable experience in handling hot material, and toxic material. Beryllium oxide was considered one of the highly toxic materials. It had to go through a cleaning process, so that it wasn't contaminated with other materials. In that, I had an experience. . .they had to have 94% theoretical density of the ceramic and that density it was supposed to be devoid of inclusion. No void, no inclusion. The chemist, a Ph.D., kept spotting vacancies. They would process the material and splice it and etch it, look at the grain structure and whatnot and they kept seeing voids there. I said, "Well, we didn't have voids." They took a look at it under a microscope and I said, "What we were getting is the pure beryllium metal, which was an improvement over the oxide." "Oh, it couldn't be beryllium metal because all metal oxidizes." Any metal would oxidize instantly. So I finally convinced them that they should analyze the etchings and when they analyzed the etchings what they found was sure enough pure beryllium, making all these little voids that they were seeing in the micrographs at the surface of the material.

GM: So you outsmarted the chemists, so to speak?

CB: Well, I had to bring them around to really looking at what the problem was. But I didn't get any credit for solving the problem. Keep in mind now, engineers thrive on being recognized for their accomplishments. . .But in the meantime our program got shut down, so I got a job with AeroJet out here in California. AeroJet was in Medusa, California. That's next door to the city that I live in, which is Glendora [in the Los Angeles area]. They were doing the hydrogen engine for space, whereas we were doing an air-cooled reactor at Curtis-Wright. So this was a new wrinkle. So I come out here to AeroJet and the first thing I find out, I go through the plans to the engine and I see that their control rods have no position in installation. No indication on a visible element as to what would activate the reactor or what would shut it down! So I said well I had to put a blind notch in the gear on the control rod so they can tell where the poison was and where the active reflectors were.

GM: This is for the nuclear core. . .the solid core nuclear rocket, as it was called? Rover or Nerva at the time?

CB: That's right, the Nerva engine. They sent me back to Westinghouse to inform Westinghouse, to the Westinghouse in Pittsburgh. . .I come back and I go through the thing and they have a destruct explosive that gets installed. So the destruct explosive, I said, "How do you know that it won't destruct due to the radiation before you're ready for it to destruct?" They hadn't thought of that. So again, I set up a program. I devised a canister to irradiate the explosive and they radiated them in a GE research reactor, wherever that was. I think it was in northern California somewhere. But anyway, having gone through the process of studying the program and testing the capsules so that they wouldn't explode in the reactor, or if any of them did explode that it wouldn't rupture the capsule or destroy the reactor. So I went through that process and we designed the capsule. We did a high-speed camera gun test on the capsule and we'd see the capsule undulate as the material inside exploded on the gun test. So I had canisters that would withstand the explosive force of the materials that were put in it. . .

GM: Now, this was in the late 1950s?

New Energy Times Archive

CB: This was in the 1960s. The early 1960s, around 1962 or 1963. In the meantime, when I came to AeroJet, I enlisted and had to sign a patent agreement with all the things that you are doing for the company. And I invented a whole bunch of exclusions because I wanted to do some research on my own. . . AeroJet was cutting down on their nuclear program. I worked on their SNAP-8 system, auxiliary power system for space.

GM: A nuclear reactor in space basically.

CB: Yes. Well, it wasn't really a nuclear reactor. They were using radioactive isotopes. . .Anyway, we got into a big hassle about my patent and each time we reached an agreement they would write it up and then they would change the verbiage to their benefit, so after about five iterations of that and finally when I kept refusing, they terminated me.

GM: I see. Then where did you go after that?

CB: I got a job at TRW.

GM: When you were at TRW, was that the period under which you saw the Papp demonstration, or no?

CB: Yes. What Papp was doing, I could immediately recognize that Papp had something that was a little more advanced than what I was doing. [Editor's Note: He refers to nuclear transmutation experiments he had conducted on his own time.—EFM] I was a staff engineer and it must have been about 1966. There was an interval in between my working at AeroJet and going to work for TRW that I went into insurance.

GM: Just selling insurance?

CB: Selling insurance. When I left AeroJet, an insurance guy that had been doing things for AeroJet came to my house and sold me a policy. He convinced me to sell policies too. So I was out of work and I thought that it was something that I could do.

GM: So you did that for awhile, but then you joined TRW?

CB: I joined TRW. I got disenchanted with the insurance thing. . .

GM: But then you get to TRW and you were an engineer there.

CB: Right, a staff engineer. We were doing thermal work on the space entities which were all highly classified. . .spy satellites. . .

GM: Tell me, now we get into the mid-1960s, probably 1966. . . Tell me when and how did you learn—first learn—of Joseph Papp and his engine? That's the key question to start this off, to transition more into our Papp discussion.

CB: When I did the insurance thing, they convinced me that I needed to be able to talk fluently, so they suggested that I join the Toastmaster Club and I did. Glendora had a Toastmaster Club, so I joined. One of the people in the Toastmaster Club ran a machine shop in Pomona. I had told my Toastmaster comrades some of the things that I had gone through with all these strange things that I was doing in my garage and this guy that had the machine shop said, "Hey, you would be interested in this engine." He had read about an engine in *Industrial News* and he brought in the article to me.

GM: There was an article in the *Industrial News*?

CB: Yes, the *Industrial News*, about the Papp engine.

GM: It mentioned Joseph Papp by name?

CB: I can't remember the article well enough to say yes or no. But I called the reporter that covered the thing from *Industrial News* and he said, "Why don't you go talk to the guy?" He gave me Roser's telephone number and I called Roser and he said, "Sure, come on down."

GM: Now, Roser's first name is?

CB: Don Roser was financing Papp. He told me, "Come on over." I was in Redondo Beach at the TRW facility and he was over in Gardena, which was only a few miles. So I went over and he had the engine in a conference room on a conference table. They ran it on the conference table.

GM: They ran it for you immediately?

CB: Yes. They switched it on and away it went.

GM: What was its' size? Describe it.

CB: It was like a four-cylinder converted Volvo engine. They had an extended head on it and they had a little piston cylinder combination sitting on top of the regular pistons in the engine. They weren't revealing to me at that time about what all the ramifications were, they just showed me that the thing would run. It was very quiet, practically made no sound. When it ran there was no heat.

GM: There was no heat? How did you determine there was no heat?

CB: You could put your hand on the engine.

GM: And there was no heat?

CB: No heat.

GM: How many RPM do you think it was going?

CB: I would say it was probably around 2,500 RPMs.

GM: It was the size of what sort of engine, would you say?

CB: About 100 horsepower type engine.

GM: A 100 horsepower car engine?

CB: Yes.

GM: So it was sitting on a conference table and they just flipped it on, by what, turning a switch?

CB: The starter engaged and turned the thing on and started the connection.

GM: When you say he, was it Papp or was it Roser?

CB: Papp turned it on.

GM: So you immediately met Joseph Papp and Roser at the same time?

CB: I met Roser and he called in Papp; Papp was off in the back room somewhere working on other things.

GM: This company was called?

CB: Environetics.

GM: Environetics. They were generally in the business of doing what?

CB: Roser's thing was Don Roser, Inc. or something, refrigeration. But they had set up this corporation for this engine. Environetics. For the engine. It was owned 50/50 by Papp and Roser.

GM: I see, so they were 50/50. Is that what Roser told you?

New Energy Times Archive

CB: Yes.

GM: How did Papp initially strike you? What sort of a man did you. . .You had an initial impression of him. What did you think of him?

CB: I thought that he was a genius.

GM: How did you feel that he was a genius? You saw an engine and there was no heat and it was going at maybe 2,500 RPM, according to your estimates. What was the thing that impressed you about it? It wasn't on a dynamometer?

CB: No, it wasn't on a dynamometer. It was just running the engine and I guess he had the transmission gear box off. That was off.

GM: But certainly something was running against friction?

CB: Right.

GM: When it stopped it was probably something you couldn't turn by your own hand, would you say?

CB: I didn't try.

GM: But there was no heat from it?

CB: I touched the engine to determine that there was no heat.

GM: And it was fairly quiet?

CB: Very quiet.

GM: Like a sewing machine or not that quiet?

CB: I'm not sure that it would make as much noise as a sewing machine. A sewing machine you can hear pretty well. This was quieter.

GM: And it was in a room. How big was the room?

CB: In a conference room. Well, you could probably fit forty or fifty people in that conference room. . .They had the fan on the engine, which was blowing air so they could show that something was happening.

GM: So they had a fan on the engine shaft to show you that the engine was actually moving?

CB: Yes, the regular engine fan was there but there was no radiator, no exhaust, no intake. Papp was a very quiet person and he knew what he was doing.

GM: How old would you say he was at that time, when you looked at him?

CB: I must have been at that time. . .

GM: It was 1966, so you were about 46, yes? Something like that?

CB: It wasn't 1966, it was 1968.

GM: You think it was 1968?

CB: Oh yes.

GM: Yes, 1966 is the erroneous number that Feynman put in his report.

CB: He had a lot of other errors in there too.

GM: We'll go into those later. This is your first visit. What month was that in, would you say?

CB: I can't remember.

GM: But it was in 1968 sometime?

CB: Yes.

GM: And it was before the big demonstration that became rather disastrous?

CB: Yes. Well, I started explaining to them problems they were going to have. The first problem that they had was credibility.

GM: Because right away they represented this to you, presumably, as some kind of new process that they couldn't tell you about but it was evidently a sealed chamber. Did they make that clear to you?

CB: Yes. There was no intake, no exhaust.

GM: No intake, no exhaust, and it wasn't producing heat, and you knew immediately that that obviously was not business as usual.

CB: He disconnected the thing from the controls to show me that it continued running. He had a little variac that he controlled the thing with. . .He said that that was a control. He showed me how many volts that he was putting into it and he could disconnect the thing and the engine would continue to run.

GM: Disconnect the electrical control from it?

CB: Right.

GM: Now this electrical control had what size wire, would you guess, going into the engine? Because you probably had some idea of, well could this be a fraud. Did you think that it might be a fraud initially?

CB: No, I didn't.

GM: You didn't, even though you were astounded by it?

CB: I had done some things. . .Back to my garage experiments with the high frequency stuff.

GM: You saw some "miraculous" things yourself.

CB: I told you that I generated a flame off a single electrode. . .

GM: Let's go back. We definitely must revisit that issue someday. We're going to definitely focus on that, but let's not divert from Papp. Go back to that first meeting.

CB: He disconnected the electrical supply to it to show that the thing would continue to run.

GM: The wire size, I'm curious about that, from this little control box, as it were.

CB: It was like an ordinary household wire.

GM: A lamp cord? About that thickness?

CB: Just about that. It wasn't a big heavy cable.

GM: Was it just two wires, two conductors perhaps, or was it something more complicated?

CB: He may have had a third wire ground wiring system, I don't recall.

GM: Could you tell by the engine. . .It was on a conference table. Could you tell whether there was any, let's be for our audience who will be reading this interview with amazement I trust, is there anything else that could have been going into it?

CB: No way.

New Energy Times Archive

GM: Why do you say that?

CB: It was sitting on a conference table. There was nothing underneath the conference table.

GM: Nothing underneath the conference table?

CB: Right.

GM: In other words, perhaps, do you remember looking under the conference table just to be absolutely sure?

CB: No. There was no question. I stood there in amazement in a clean conference room with the engine sitting on the table.

GM: Working. Like an automobile engine working on a table, just not producing heat or exhaust.

CB: It wasn't working when I went in, it was working after.

GM: Did you or anyone else. . .This is just a quick query and I think I probably know the answer. You didn't necessarily then and there try to move the engine on the table?

CB: No. An engine like that must have weighed 300 or 400 pounds.

GM: But it was sitting on a table.

CB: A conference table.

GM: To be fair, the severe critics would say, "Well, it could have been buried, a tube of some kind of energizing motor, an electric motor. It could have had a power cord going inside the table and so forth and so on."

CB: No way.

GM: But the point of the matter here, from my perspective and perhaps you can comment on this, this was a guy by the name of Roser who had hired Papp on and was not going to be interested in a completely losing, stupid, fraudulent proposition. He expected some kind of benefit to come, ultimately, from this engine.

CB: Right.

GM: And if it were a complete fraud, well that would be really bad. But your impression of Roser was that he was completely of the opinion that this was for real.

CB: He was a pragmatic person, whatever pragmatic means.

GM: It means that a fraud could not go very far.

CB: Not with him.

GM: Not with Roser.

CB: No. He was doing compressors and whatnot for his refrigeration business.

GM: So he had a business going already, a thriving business possibly, and in comes Papp and the story, according to other reports. . .

CB: It was a guy by the name of Phalen, I believe, that introduced Papp to Roser.

GM: Phalen introduced Papp to Roser?

CB: Yes. He was a Hungarian also.

GM: Was he associated with Papp in some way?

CB: No, he came across Papp in some way or another.

GM: Papp had come from Canada, I understand. In other words, he came from Hungary via Canada.

CB: Right. He had been in Canada for some time. He told me about his submarine. . .

GM: Exploits. Let's talk about the submarine later; that's a strange episode in which Papp didn't come out all that well, in my opinion. But let's continue with the engine, your first viewing of it. How long were you there at that time when you were watching this engine?

CB: I was probably there an hour and a half or two hours.

GM: How did it end? What did you say to Roser and Papp?

CB: What I told them was that they would need to put the thing on a dynamometer to demonstrate to the doubting public that they could do work with that engine. I told them that they would have a tremendous job with the credibility factor because of the unusual concept and the explanation for that. One of the things that Papp told me at this viewing, this first affair, was that he had a heretofore unknown metal that he was using in the electrode in the system.

GM: So he said there was some "unknown metal" in it?

CB: Yes, unknown metals. It was a secret and he wasn't going to tell me what they were.

GM: Did he tell you about the fuels that were in there? Did he tell you about noble gases?

CB: He said he was running it with noble gases, and the unnamed metal for the electrode. He told me the volumes that he had put in there and. . .

GM: The volumes of gases?

CB: Yes. Like 10 cc's in each cylinder and he had four cylinders. So it amounted to 40 cc's of these noble gases. They were going to. . .One of my requests, I said that I would attempt to get TRW to fund this.

GM: But you were, at that time, seeing this on your own private time, I trust?

CB: No, I was on TRW time.

GM: Okay, so in other words you were on TRW time, but TRW hadn't sent you per se.

CB: I had requested from my supervisor to go have a look at this.

GM: Oh, I see. So you had a formal request to your supervisor at TRW to see it?

CB: I got permission to take the time to go there and look it over.

GM: That's excellent.

CB: Of course I did. When I told them the problems that they were facing and discussed with Joe Papp the various things: that he was going to get a leakage of his gases past his O-ring seal to the thing down into the crank case. A solution for that would be to make a bellows, which he then included in his patent application. . .Also I suggested to him that he could put a little tank on the thing with a stopcock in it that he could bleed new gases into the cylinder as things got deficient and the power diminished. Subsequently, he incorporated that on a bigger engine, but that's getting ahead of the story. Another thing was that he told me that there was a

New Energy Times Archive

tremendous electron release with the operation of the thing.

GM: Electron release?

CB: Electron release. I said he could take advantage of that by putting copper coils around the cylinders.

GM: In other words, he could get electricity out of it somehow?

CB: Right, or feedback or whatever.

GM: Some power augmentation or extraction or something.

CB: He had magnetic forces and whatnot and various things that he could do.

GM: But he wasn't doing it then?

CB: No.

GM: In other words, the coils that subsequently appeared on the patent were not there then?

CB: Right.

GM: That's very important to know. So this was basically a sealed, modified engine of some sort.

CB: Right, a sealed, modified mobile engine; they had taken off the regular head and reimposed on that a head that contained Joe's secret cylinder. Subsequently, he had four more of the same model built and this Warren Johnson, who was the one that told me about it in the first place, I got him to make those four engines, the modification. He was just doing the Joe Papp cylinders that would modify, and the head that would modify the Volvo engine.

GM: This man's name again, was?

CB: Warren Johnson, of the Warren Johnson Machine Shop in Pomona, California. He built the subsequent four engines for Roser and Papp. The modification, not the engine.

GM: When you went back to TRW, what did you report to your supervisor and what did he say?

CB: Well, I told him all about it and he was dubious.

GM: Dubious, of course. He was another engineer, I trust?

CB: Yes.

CB: My immediate supervisor's name was Les Ruttner and a fellow by the name of Cagle was over all of our division. But anyway, both Ruttner and Cagle were advised of what I learned. They said they would like to hear more about it, but they were not particularly interested.

GM: Their initial reaction was skepticism even though you told them that you saw a working engine?

CB: However, Ruttner, being a Hungarian, he was more interested than Cagle was. He wanted to have a look at it too. Subsequently I think there were two or three instances that we went over and watched the thing demonstrated.

GM: Two or three more occasions in which just you and other associates from TRW went over and saw it?

CB: Ruttner was the only one that went over with me after that time.

GM: What did Ruttner think about it?

CB: Well, he thought it was very interesting, but he had no concept of what it was about.

GM: He knew it was unusual? I mean, a powerful engine working without exhaust.

CB: He had no idea that there was power there yet.

GM: Yes, but it was working against friction; even though it could be low power, it did have some. . .

CB: You could compare it to a "perpetual motion" device.

GM: Right, that just rotates by itself but it doesn't perform external work.

CB: Right. Again, the recommendation from me that they put it on a dynamometer to demonstrate. Somewhere along the line, Papp proposes. . .We had had several conversations and at one point I—not getting anywhere up the line of command—I finally contacted Sy Ramo.

GM: Sy Ramo, the head of TRW!?

CB: At that time, yes. One of the heads of TRW at that time, with Wooldridge and Thompson, who was the "T" in "TRW."

GM: You contacted top management at TRW?

CB: Yes, I contacted Ramo.

GM: What did they say?

CB: Ramo assigned his aide to birddog me in this operation.

GM: To help you out, to kind of manage whatever you were doing with this?

CB: Right. So anyway, in conversations this aide. . .In talking, this aide (and I don't even remember his name now). . .He and Roser and Papp and I sat in a restaurant or bar or somewhere discussing a course to take to get this thing underway. Right off, the aide thinks that there should be a new corporation set up such that the co-owners would participate in the ownership of that corporation. . .

GM: Roser, the aide, you, and Papp?

CB: Right. After that meeting, I told Roser, "That's not the way TRW operates." I said that this guy was trying to pull a fast one. I advised Roser against taking any movement in that direction. In the meantime, we're still talking about getting the thing on a dynamometer. Papp then suggested instead of a dynamometer, would I be convinced that there would be power if he made a cannon and hurled a projectile. . .I said, "Sure, I can make calculations to determine how much power." So he built a cannon.

GM: He built a cannon based on the explosive nature of the noble gases that he was using?

CB: No, he was just merely going to expand the gases. He took one of the cylinder types that he had in the engine, he took that unit and he hung the pipe, a stainless steel pipe which turned out to be a schedule-50, I believe. It was stainless steel, so it was extra heavy duty. . .I looked at the table and when I saw the type after the cannon experiment, the wall of thickness looked to me to be half an inch.. .The report that went out on it was like it was a quarter of an inch, well this was at least twice as thick as that. The table was six-tenths of an inch. . .

GM: What was the outsider diameter, would you say?

CB: Add an inch to three inches, so the outside diameter had to

New Energy Times Archive

be at least four inches. It was about three feet long.

GM: And after this meeting at a diner or someplace at which Papp suggested that he make a cannon. . .

CB: It wasn't at that meeting that he suggested making a cannon. . .That was just a business type meeting trying to get a direction.

GM: But subsequently there was some other time in which he said, "Would you be convinced of it, short of a dynamometer, would you be convinced if I made a cannon?" In other words, there was a way to do it simpler than a dynamometer.

CB: This way he wasn't letting the engine out of his hands. If he put it on the dynamometer it was out of his hands. . .unless he stayed with it. He was reluctant.

GM: He was reluctant. Clearly he was a secretive man, yes?

CB: Yes.

GM: Did you get any feeling from him that there were any. . .He was an eccentric fellow you probably could tell, is that correct?

CB: No, I had not discerned any eccentricity yet. He was a very congenial person, but he also didn't tell any of his secrets.

GM: Did Roser know? Was it known to you whether Roser knew about. . .

CB: He explained everything to Roser.

GM: But Roser must have told you that he didn't know everything?

CB: Let's put it this way, Roser didn't understand everything. He could be told, but not understand.

GM: Getting back again to the cannon. . .Let's continue the cannon story, where basically somewhere in this negotiation phase Papp brings up the idea of a cannon, and then what happened?

CB: I said, "Sure, I would be able to determine energy release if he built a cannon." They built a cannon. They based it in good, thick concrete with [steel] rebars and whatnot around the stainless steel pipe.

GM: In other words, it was a massive structure?

CB: Yes. They called it a "coffin." It was a big, huge concrete whatever that they had around the thing. They welded onto the end of the pipe a one-inch thick flange which they bolted on a one inch thick flange through which they put an A-N fitting that he could use to put the gas into the chamber. In the meantime, they had gotten the Underseas Lab at Pasadena involved.

GM: The Naval Underseas Laboratory?

CB: Right. The Naval Underseas Lab. There were two guys there and I had been in contact with them. I talked to them. They either contacted me or I contacted them or whatever; I can't remember now who contacted who. I had a lot of talks with them. They inspected the assembly of this cannon and they put their seals on the darn thing, wired it up and put seals and whatnot so they could tell if it had been tampered with.

GM: In other words they deliberately were putting seals on it so that nothing could be tampered with so that it couldn't be. . .

CB: So they could not insert some explosive.

GM: They were wondering whether an explosive might be attached or something?

CB: Right, like nitroglycerin or whatever.

GM: Did Papp himself get these people involved or did you get them involved?

CB: I didn't get them involved. Roser may have. Papp wouldn't have. His major thing was he was going out and seeking resources to support his thing at the time. Anyway, these two guys observed the assembly of the unit and verified and wrote that they had inspected it and everything was as represented. They left the concrete there at least a week then put it out in the desert. They told me where it was going to be and I drove out there. It was east of Lancaster, California, out in the desert. There's a big pile of rocks out there. They got up on that big pile of rocks with this device.

GM: The Navy people were there?

CB: Those two were there and there were some work people there. Roser was there and Papp was there and I was there.

GM: Was Ruttner there?

CB: No, Ruttner wasn't there.

GM: Do you remember the time of year that was?

CB: I can't remember what time of year that was. It was either

Baumgartner's Invitation to the Cannon Demonstration

October 17, 1968

Dear Mr. Baumgartner:

Environetics, Inc. intends to perform yet another demonstration on October 27, to indicate the tremendous power of their energy concept previously demonstrated in an engine.

However, because of the nature of this demonstration, it will be performed only once and for the benefit of a very few restricted visitors on their own recognizance.

The demonstration will consist of firing a 10 lb. steel projectile with a 2-1/2" diameter through a resistance barrier (wood) using one cylinder taken from the engine for the propelling mechanism.

Because of the inherent nature of this demonstration, a site will be selected in a nearby remote desert area in southern California. Observers will be permitted to photograph with still or movie cameras, all aspects of the demonstration and may thoroughly inspect all devices, tools, energy ingredients together with the charging procedures prior to, during and after the firing of the projectile.

Naturally, because of the high pressures created by the explosion, our power cell will be destroyed as it was not constructed for this purpose.

If you will express your interest in witnessing this demonstration we will notify you of the exact location of the site selected and confirm the hour at a later date.

Should you elect to accept this invitation, we will count heavily on your presence. Your prompt reply will be appreciated.

Very Truly Yours,

Don Roser

New Energy Times Archive

1968 or. . .I've got an invitation around somewhere that's got that date on it. I've got some names of other people that were at that. So they got the thing set up and Joe has five flasks. Little glass cylindrical laboratory flasks that hold about a pint or something like that. It was three or four inches in diameter and tapered up the neck. [They] just had rubber stoppers in them.

GM: What did he do with those?

CB: He showed that these were all full of his noble gases.

GM: He indicated that each one had a different gas in it? Then what did he do?

CB: He takes a hypodermic needle and he goes to the first flask and he draws out so many cc's and he puts it into the fifth flask. He goes to the second flask and does the same thing. Keeps going on to all four flasks, into the fifth flask.

GM: With a hypodermic syringe?

CB: Right. Then with the hypodermic syringe he withdraws his 10 or 11 cc's from that fifth flask. . .

GM: From the mixture.

CB: Right. He injects that through the rubber stopper in the A-N fitting into the cannon.

GM: You call it the "A-N" fitting?

CB: The Army-Navy standard aircraft nomenclature fitting.

GM: A fitting of some sort that had perhaps a rubber insert in it so that you could. . .

CB: He had a rubber stopper in it.

GM: In that fitting. Okay, so then he stuck the hypodermic into this fitting and the rubber stopper in it and injected the gas in then, into the cannon?

CB: Right.

GM: But presumably the cannon had a lot of air in it as well, yes?

CB: Yes. Whatever air was in it was not evacuated.

GM: He did not evacuate it?

CB: He did not evacuate it unless before he filled his fridge with the gases he may have gone to the thing and withdrawn the same quantity.

GM: Here's the key point. This is very important. You observed Papp do all of these things, is that correct?

CB: Yes.

GM: You and everyone else observed it.

CB: Whoever wanted to watch. Not everybody watched him.

GM: He injected this into this cannon and as far as you know it was a pretty dumb cannon. In other words, it was basically a pipe which might have had air in it, let's say. What kind of projectile was used at the end that was going to blow away?

CB: The projectile had to be about 9 to 12 inches long. Steel. I don't know whether it was stainless steel or what it was.

GM: And was that put into the cannon when you were there?

CB: No.

GM: It was there already?

CB: That was observed in the initial assembly by the Navy Underseas people.

GM: Okay, so the Navy people had put the projectile in.

CB: Well, they didn't put it in.

GM: I mean, it was put in perhaps with their observation and then Papp. . .

CB: He may have had a sealant of some sort, glue or something or other, to seal the thing so that the gases wouldn't escape. But the Navy guys that observed that would have noted whatever it was that he did.

GM: They knew what the protocol was going to be. The point was to see whether this projectile could be fired by his process. So they did whatever precautions would have been in order to make sure no unusual explosives were introduced, at least as far as they could tell. But then Papp injected this gas in, this mixture of noble gases supposedly, and then what happened?

CB: One thing that I noted, that as he transferred so many cc's of his gases to the fifth flask that his hand shook noticeably.

GM: What did you attribute that to at the time?

CB: I would say that it was the uncertainty factor. He got it all set up and he hooked up wires from a portable Briggs & Stratton generator and said, "Okay, now everybody take cover, we're going to fire it."

GM: In other words, he had a little gasoline powered AC generator, producing AC power perhaps? And wires were leading from that to the cannon?

CB: Correct. I got behind a rock overhang and they got behind a rock behind the cannon and they set up a target about maybe 150 feet or so down the way. . .They put the cannon on a platform of boards, plywood and planks and whatnot. . .It was a downslope type target. Not a steep slope, just a gradual slope down. So anyway, the target maybe was 150 feet down. They got behind rocks that must have been 15 or 20 feet behind the cannon. The generator was behind that rock. The thickness of the boards and planks and whatnot must have been over a foot thick.

GM: You're talking about the target or the platform?

CB: The platform that they had the cannon sitting on. At least a foot thick, plywood, planks, and whatnot. The target itself was maybe only two inches thick or something like that, which is immaterial as it turned out. They fired up the generator and the generator just about got to full speed and it made a loud sound and the cannon went "boom" and I came out and they said "Get back!" and I got back under the rock.

GM: Who said that, Papp?

CB: Roser I think was the one who yelled. There was a big boom from the cannon and I started to walk out and they said "get back" and I got back under the rock and it started raining concrete! The whole thing exploded. The barrel went almost down to the target. The barrel of the cannon went almost down to the target.

GM: In other words, the barrel with the projectile in it?

CB: The projectile went about two-thirds of the way down the pipe and the pipe peeled like a banana—a half inch or greater thick

New Energy Times Archive

stainless steel was blown open with such force that it looked like if you just take a banana peel and peel the thing in all directions.

GM: That's amazing.

CB: It didn't just rupture the thing. The metal of the pipe formed a 90 degree angle from the axis of the pipe, so that had to come out with a tremendous force to blow that around to where it bent it that far.

GM: So the pipe was bent, the concrete around it was shattered?

CB: The concrete around it was shattered and went up in the air. A lot of it went up in the air.

GM: And the rebar?

CB: Well, the rebar shattered a lot. The planks below it were all blown to bits.

GM: Two feet of wood.

CB: And there was about a two and a half foot to three foot hole blown into the sand right below the plank. . .about four feet in diameter.

GM: Amazing! You must have been shocked.

CB: I was amazed. I was convinced that there was power there.

GM: Well, there's no question that there was power there. The only question that remains is what was the source of that power? Was there perhaps some dynamite introduced illicitly or did nitroglycerin get in there illicitly? Who knows? That's part of the Papp story.

CB: The two Navy guys inspected their seals when the thing arrived on the site. They said it hadn't been tampered, there was no way they could have gotten anything into that. My calculations, they don't have anything, even from an oxygen/hydrogen explosion. . .Keep in mind now that I had done calculations on the various explosives for AeroJet and they didn't have any explosive that would anywhere near do what this did. I had designed capsules to contain explosives. . .The projectile went about two-thirds of the way down the pipe and it split that pipe open, blew the concrete away and the steel had formed a 90 degree bend.

GM: Where was the bend, above the projectile?

CB: The bend was at the end of the projectile. The back end of the cannon was shredded. The whole thing, all of the metal thing, went down almost to the target and the concrete blew in all directions.

GM: It was found near, I mean somewhat. . .a few hundred feet away?

CB: At least 100 feet from the launch point.

GM: And the concrete was all destroyed?

CB: Right.

GM: And the wood was?

CB: The wood was splintered in the hole in the ground below it. The flanges were ripped off the edge of the pipe. They had come back and hit rocks near where the guys were standing. If they had just been standing there in front of the rock, they would have went down.

GM: This is really a remarkable story. I don't think I've ever heard of anything. . .I have not heard this before.

CB: It was a cannon experiment. There's something even more novel than that. We'll come to that later.

GM: Something novel about that experiment?

CB: Well, not that experiment.

GM: What happened after this event? What were people saying to each other?

CB: I had my company's Polaroid camera with me and I took pictures of this.

GM: Do they exist?

CB: Well, they do somewhere, but like I told you [before the interview] the other day in a telephone call, I had them in my briefcase and my briefcase got stolen out of my convertible. . . just months later.

GM: Months later it got stolen out of your open convertible. So no pictures exist as far as you know of this explosion?

CB: Well, somewhere they do. . .

GM: Was Roser about your age?

CB: I would think. Maybe a little younger. I was pretty old. He was probably about the same age. . .Where were we?

GM: The explosion ended and what happened?

CB: I go back with the pictures and I convince the people at TRW that they really have something that releases energy and they should look into it. So finally they were convinced and they said, "Okay, let's do it."

GM: Cagle and Ruttner both?

CB: Well, up above them somewhere, the vice-president. I had been going through various channels to try to get this sanctioned to begin with, so I was up and down the hierarchy. They had a go-ahead and when Roser said they were going to finally send the thing off to Stanford Research [Stanford Research Institute, SRI] to put it on a dynamometer, that they were going to have this demonstration prior to it.

GM: Prior to it. So in other words, the TRW people got aboard. In that same period Roser conveyed to you that it was going to be tested at Stanford.

CB: They were going to put it on a dynamometer.

GM: Okay, Roser told you that. He informed you that there was going to be a demonstration in the meantime.

CB: Yes. I was periodically conferring with him and Papp and one of the conversations in doing this demonstration. . .Papp wasn't talking to me, he was talking to Roser, but in my presence. He said that if anybody doubted him he would "blow the God damn thing up."

GM: But this was after the explosion? After the cannon experiment?

CB: After the cannon experiment.

GM: So in other words, they are about to have some testing of the engine somehow, dynamometer testing. . .It was going to be tested but he. . .You overheard him saying to Roser, "If anyone doubts this. . ."

CB: He said that if anyone doubted that he had the energy

New Energy Times Archive

there, he would "blow the God damn thing up."

GM: Remember, he had already blown up. . .

CB: The cannon. . .I think that surprised him. He was expecting that projectile to go down to the target.

GM: But he didn't know how powerful it could be.

CB: Right. He didn't really know how powerful it was. Of course, I didn't either.

GM: By the way, out of curiosity, even though pictures may not be available, is it conceivable do you think that Roser or someone else may have kept that destroyed piece of apparatus?

CB: I doubt very much that they did. You can ask Roser. I asked him about the four engines. He said they scrapped them.

GM: You had subsequent contact with Roser and he said they scrapped them?

CB: That was maybe six or eight years ago that I was in contact with him again.

GM: Getting back now to the immediate aftermath of the explosion in the desert. . .

CB: When I took the pictures back to TRW, I didn't have quite as much problem convincing them that there was energy there.

GM: How many Polaroid pictures did you take?

CB: I must have taken a roll of them, a packet.

GM: Those crooks that later stole from your car, whoever they were. . .

CB: I think it was the guy that ran the "roach coach" because he was the only one there that could have gone off with it. But anyway, I convinced them that they should proceed with it so when they said they were going to have this demonstration we arranged to have a contract there, so we had an inside track on acquiring the thing from them, and we had a good rapport with Roser and with Papp. The consensus at TRW was that they could name their own price for the thing, assuming that they would be reasonable businesspeople. . .Somewhere in writings I see that they claim that TRW was giving $3.5 million for this. That hadn't been established. . .No number had been established. It was open and they could name their price.

GM: Right, because everyone knew that it was an energy source of some kind.

CB: Right, and it was an unlimited energy.

GM: Right, if it were real, and it would seem to have established itself by that explosion. So there really were high level people in TRW that were going to be very cooperative, yes? So everything appears to be on track so far.

CB: They had a lawyer. He said that the blank was open and they could fill it in with whatever number that they felt was reasonable. Just to fill it in.

GM: The lawyer said this?

CB: Yes, he had the contract. His name was Childers. He had the contract in his pocket. It was a contract that TRW would fund the thing and do whatever was necessary to put it on the market and they could name their price, whatever they required. So it was an open, blank contract. All they had to do was put their name on it. They set up the demonstration. It was no longer in a conference room. After the cannon experiment, they didn't run the engine in a conference room. I thought that was an important thing.

GM: You mean before the accident where Feynman was present, had there been subsequent runnings of the engine outside?

CB: I believe so.

GM: In other words, they got a little nervous about that engine being in. . .

CB: Yes, they were a little nervous about the engine being in the conference room. They saw what power it had. In setting this up for the demonstration, Joe asked me to locate a generator for him. We came out here to Azusa to the surplus war materials and whatnot and he got a couple of magnetos from some military equipment of some sort that would generate 40,000 volts. They had ordered a generator. These were not generators, these were magnetos; there's a difference between a magneto and a generator. They had ordered the generator so that they wouldn't have to tap into the house current. They wanted the thing self-sufficient.

GM: You mean out in the parking lot or wherever they were going to demonstrate it?

CB: That's correct.

GM: Why did they care one way or the other?

CB: To avoid anything like Feynman did, claiming that they ran it from house current.

GM: But they had a generator nonetheless.

CB: They had a generator, but for some reason or other the thing did not generate enough voltage at the RPM they were running for it to be successful. So they had to forego that and they still had to hook it up into the house current to control it. I thought that was an important factor in the overall outcome of things.

GM: So there was a wire going, on this demonstration. . .Do you remember the day or the month?

CB: I've got it somewhere.

GM: It was in November 1968, but I don't know the specific day. We have a newspaper clipping that explains the tragedy, the 19th of November and it said the Monday before then there had been this accident. [We have since established that the accident occurred on November 18, 1968.]

CB: Yes, that would establish the date.

GM: But irrespective of the date, did you have an idea that this was going to be. . .before the engine went off to Stanford to be tested on a dynamometer, what was the main idea of having this large gathering?

CB: That I never understood. As I understood it, they were only going to demonstrate this to the TRW people. Because TRW had the contract.

GM: Right, so what's the point of having these other people?

CB: That's what I couldn't understand. There was a whole crowd of about seventy people, I'd say. Everybody had to sign in. Roser had a sign-in sheet. They had to sign up that they were there under their own recognizance and Environetics would not be responsible for any accidents or whatever.

New Energy Times Archive

GM: Oh really?

CB: They had a disclaimer on there.

GM: They had a disclaimer?

CB: They had a disclaimer.

GM: But they had a bunch of people and evidently he was. . . The contract had not been signed yet, or had it?

CB: I think that there were a few people that hadn't signed the thing. There were one or two people that just walked in off the street because they saw something going on.

GM: This was in the parking lot of Environetics?

CB: Yes.

GM: Would you describe the layout? How big was this parking lot?

CB: I don't know, you could probably park fifty or sixty cars in it. It was off one of the main streets.

GM: In Gardena, California?

CB: Right. I don't even remember the street name. But anyway, they started the thing up. First they did a little speech, an explanation and whatnot. Both Roser and Papp. Roser first and then Papp second, telling about the engine.

GM: Were there any people taking movies, by any chance?

CB: One of the TV entities was there doing a TV on them.

GM: A TV coverage of it?

CB: Yes. I don't remember what. . .

GM: It was definitely a broadcast outlet, to your knowledge?. . .

CB: I think they were taping. I don't think they were live.

GM: Maybe a tape exists. . .Okay, so what happened? You could park how many cars again?

CB: They did not have any cars parked in there, they just had the engine out. It was maybe 20 or 30 feet to the south of the building. The parking lot was on the south side of the building. The parking lot ran all the way through from a block wall.

GM: . . .Now that you know that Feynman was there, you would remember him there I trust?

CB: I know that Feynman was there. I didn't know who he was at the time. But they told me afterwards that it was Feynman, but we'll come to that later. They had the thing set up there and all of us could get all the way around the engine. It was out where you could be all around the thing. To the west of the building and us were some old refrigeration cases, the type that you put frozen foods in. They open at the top and you had to reach down in to get whatever you had; I see they still have them in grocery stores. They come about waist high on me. I was standing behind one of those when it exploded.

GM: When it exploded, okay. But describe the whole sequence of events after Roser and Papp gave a talk.

CB: They started up the engine and the engine ran.

GM: They started it with an electric current from the wire that was going into the. . .

CB: They started it from the battery. They had a battery that was the starter. An automotive type battery, because it was an automotive type starter. The starter engages and then it disengages when the speed is faster than the starter turns.

GM: So that's the whole point of having that power applied?

CB: The point of having the control power from the house was through a variac, and Joe demonstrated on the variac what kind of voltage he was putting in to control the engine.

GM: That cord, as you mentioned before in the earlier observation of the engine running that you saw. . .

CB: This was a slightly different cord. This was just a standard 15 amp cord.

GM: That's what I'm saying, for the control part.

CB: For the control, right.

GM: That's what I'm saying, but the. . .There are two electric inputs, so to speak. One is from the battery to a starting motor to engage. . .I mean a lead/acid battery with a starting motor engaging it and so forth. At the same time you have this flimsy lamp cord, as it were. . .

CB: In this case it was just a standard, not like a household lamp cord. Like an outdoor type cable that you use for hand equipment.

GM: In other words, a thick extension cord.

CB: An extension cord, yes. Not a real thick one, but the whole thing is maybe 3/8 inch diameter.

GM: So what happened when he. . .

CB: He started the engine. The engine ran very quiet and everybody "ooh-ed" and "aah-ed."

GM: Everyone was "ooh-ing" and "aah-ing."

CB: No engine intake, no engine exhaust.

GM: It's outside. Is the fan. . .

CB: The fan is running. . .

GM: So in other words, the engine fan with no radiator, and running at what would you say RPM-wise?

CB: I couldn't tell what the RPMs were.

GM: The fan was, shall we say, running so fast that you couldn't see the individual blades.

CB: Yes.

GM: So it was really a standard automotive fan, would you suggest?

CB: Right. Running at that speed you could get, say, you would be running 40 or 50 miles per hour.

GM: No palpable exhaust, of course?

CB: None whatsoever.

GM: No sound of a gasoline engine?

CB: No coolant.

GM: By the way, was this engine on top of some kind of platform?

CB: He had it on a little cart of some sort.

GM: A little cart. A portable cart?

CB: I can't remember whether it was that or if he just had it sit-

New Energy Times Archive

ting on 4x4s there on the parking lot.

GM: You can't remember that detail, okay.

CB: Anyway, they had it out there and it was running.

GM: And there were "ooh-s" and "aah-s," you say?

CB: Oh yes, and then Joe demonstrated that he could disconnect it from the house current and it would continue to run.

GM: He did that?

CB: He did that.

GM: He disconnected the control cord?

CB: Right, at the controls; he disconnected the control at the variac.

GM: At the variac he disconnected the cord?

CB: Right.

GM: So the engine was running by itself then?

CB: It continued running.

GM: Did people go over to the engine as you had done before when it was on the conference table on your very first visit and touch the engine to find out whether there was heat coming out?

CB: No, I didn't touch it at all.

GM: No, you didn't do it then, but you had earlier.

CB: I had earlier and I was one of the knowledgeable people.

GM: Did people there, seventy people. . .

CB: There were various people there that did touch it. . .

GM: In your opinion, they would have come away with the impression, "Gee, why isn't this hot?"

CB: Yes. . .Okay, so he disconnected it.

GM: It sounded again like; let's repeat because the first appearance when it was running indoors you said that it was running kind of. . .I said like a sewing machine and you said even quieter.

CB: Yes, a sewing machine makes noise if you put in material.

GM: This Volvo engine reconstructed of about 120 horsepower general capability was running quieter than a sewing machine.

CB: I would say yes.

GM: But the blades were churning the air like crazy.

CB: Yes. You could get the wind noise.

GM: Definitely no gasoline tank there, definitely no gasoline sensation, no explosions whatsoever of gasoline as we normally understand it?

CB: None.

GM: How long after this "ooh" and "aah" from the crowd of seventy people or so, how long did this last?

CB: Several minutes, then he disconnected it to demonstrate that the power from the house was not running the thing.

GM: Did he say that that's why he was doing that?

CB: Yes.

GM: He said that, Papp?

CB: Yes. He showed that it's running and it's disconnected.

GM: The starting motor with its battery was still probably there to be. . .

CB: The battery is there but the starter is disconnected.

GM: The starter was disconnected. So it was just to start the motor.

CB: It's got a message on it that when the speed comes up the starter disengages. So he demonstrated that he could disconnect it, but when he disconnected it, there was a slight change in sound and maybe a slight dropoff in RPM. When he disconnected it, but it still continued to run. He noticed it was just a little rougher, it wasn't as smooth. Yes, maybe there was a little bit of vibration on the thing. It continued to run. But then he plugged it back in.

GM: He did plug it back in?

CB: Yes, he plugged it back in and it smoothed right out and it continued to run. He did that a couple of times.

GM: The only thing that you could tell was coming from that variac was a wire that was not. . .The extension cord was going to the variac and then the variac had some other wire to the engine, a thinner wire than the extension cord?

CB: The wires going to that were individual wires.

GM: How many?

CB: I didn't count them. He had to have a wire to each cylinder.

GM: One to each cylinder?

CB: Yes, he had to have at least two wires to each cylinder.

GM: This is very important. From the variac, was there at the variac something that looked like, let us say, a control box perhaps that had some other electronics in it perhaps?

CB: That I didn't notice.

GM: But something coming from the variac and/or whatever else might have been there, smaller gauge wires than the extension cord, perhaps I'm now putting words in your mouth, just verify yes or no, were going to each of the cylinders.

CB: Yes, he had wires going to each of the cylinders.

GM: Four cylinders?

CB: Yes.

GM: He disconnected what wire?

CB: He disconnected the plug-in at the variac—the one that goes to the house. This was going on for maybe 15 minutes.

GM: The engine was going for 15 minutes?

CB: I would say. Then we hear. . .we notice the thing running rough again. Here's Feynman standing up at the wall of the building and he has disconnected the thing at the source.

GM: He himself did it? He disconnected the variac power supply?

CB: Right.

GM: Was there an outdoor outlet? Let's establish this. Did it look like Feynman was doing this of his own accord?

CB: Right. It wasn't by invitation or anything.

New Energy Times Archive

GM: That's a bad pun, of his own "accord." It looked as though Feynman. . .You didn't know who he was then, yes?

CB: Right. He says, "It's a God damn hoax!" and he held up the end of the extension cord.

GM: He says, "It's a God damn hoax"?

CB: Right and he disconnected the thing. And the engine continued to run.

GM: Literally that phrase, "It's a God damn hoax."

CB: His phrase, "It's a God damn hoax" and everybody looked his way. . .

GM: He looked at the audience?

CB: Yes.

GM: This is the first time this detail has ever been reported publicly.

CB: Anyway, he's at least 100 feet from where the engine was.

GM: Most of the people are nearer to the engine, would you say?

CB: We were all standing around the engine, maybe 10 to 15 feet back from it.

GM: And he's nice and safe at 100 feet away.

CB: He was 100 feet away at the wall, disconnecting this one extension cord.

GM: What was Papp's reaction to this?

CB: Papp looks over and he gets beet red, really flushed with anger.

GM: Towards Feynman, because as far as you could tell Feynman was not given permission to remove the cord.

CB: No way did he have permission to remove the cord.

GM: But earlier. . .Let's establish this, because people may forget this. . .Earlier you told me that Papp himself as a demonstration *did* disconnect the wire himself.

CB: Yes, but according to Feynman's story, he said that Papp *invited* him to disconnect it, and that's bullshit!

GM: The point is, there was an initial test by Papp, obviously Papp doing it himself, disconnecting the cord with the engine running a little rougher. Now again comes a disconnect but this one unauthorized.

CB: Right.

GM: So Feynman is effectively creating a provocation in two ways, if I may say. Number one, he's doing it unauthorized and by your statement doing something even more provocative, namely stating to this entire crowd that he thinks it's a "God damn hoax"! So what does Papp, turning red as a beet, now do?

CB: He really flushed up. He had a quick conference with Roser right there at the engine. It was only very brief. I see them talking to each other near the engine, right near where he himself had disconnected the terminal. So then Roser said, "Everybody move back, we are going to plug it back in." So we all moved back, at least 75 feet back. I got behind this refrigerator.

GM: Because you had seen earlier the effects of an explosion, from the cannon experiment.

CB: Right. I'm anticipating an explosion.

GM: You are because you had seen it. . .

CB: In the cannon. So I got behind the thing. Childers stood next to me.

GM: The lawyer from TRW.

CB: Right. He stands next to me and he's just beyond the end of the refrigerator unit. The Mattel toy engineer was standing just beyond Childers.

GM: Why was the Mattel toy person there?

CB: The Mattel toy person was the person that got killed. I told everybody to move back, then Papp went back and plugged the thing in at the building and the thing exploded.

GM: When he plugged it in?

CB: When he plugged it in. The instant that he plugged it in, it blew up.

GM: The engine blew up in the process of. . .it was working, it had not stopped, yes?

CB: It never stopped.

GM: It never stopped?

CB: No.

GM: But when Papp plugged it into the wall where Feynman had removed the cord, that's when it blew up. Feynman must have been right near. . .

CB: Very close to Papp.

GM: Very close to Papp at the wall about 100 feet away from the engine. Then describe what happened. What was the sound like?

CB: It wasn't quite the boom that we had out on the desert. It was more of a splat. But anyway the engine blew up and I assumed that these people just right next to me were ducking from the debris. I said, "Okay, guys, you can get up now, it's over." Well, they couldn't get up. One of them was killed and the lawyer had about an inch or inch and a half bone knocked out of his left leg.

GM: He was the attorney for TRW.

CB: Right.

GM: Amazing. Blood must have been all over the place.

CB: They had signed waivers.

GM: Everyone had signed waivers.

CB: But there were lawsuits that ensued. Childers got an $80,000 compensation for his injury. I don't know what the dead person's family got.

GM: What happened, did the whole crowd disperse at that point? There must have been pandemonium.

CB: No. We went over and looked at the engine.

GM: Wait a second. A man right near you, the Mattel guy. . .

CB: They called emergency and the ambulance came.

GM: What was the nature of his wound?

CB: He got hit in the solar plexus with a piece of the cylinder device, like a bottom end of the piston that Papp had put in the

New Energy Times Archive

thing, which turned out to be a disk sort of thing because the rest of the thing had blown away. The bottom end of this little piston thing that he was driving the regular piston with, that piece from one of the pistons hit him in the solar plexus.

GM: Was he bleeding?

CB: Yes. Feynman comes over and tries to resuscitate him by pushing on his chest, trying to get him to breathe.

GM: Okay, so Feynman is trying to do CPR.

CB: Right. I thought about it and I said, "Hey man, if you're going to try to revive him, do mouth to mouth resuscitation; you're pushing his guts out." Feynman's report was that one of his student's was doing this; that was bullshit. *He* was doing it. He's covering his butt I guess.

GM: One of his students was doing what?

CB: Doing the resuscitation.

GM: But you saw Feynman doing the resuscitation?

CB: I saw Feynman doing it and I stopped him from pushing on his chest.

GM: Because you thought that was inappropriate.

CB: Right, because there was blood gushing out.

GM: So you said to just blow into his lungs, in other words.

CB: I told him to just do mouth to mouth resuscitation.

GM: Had you taken CPR yourself?

CB: No, I hadn't.

GM: Okay, but you kind of used your engineer's logic. But Feynman said, "No, I'm not doing it, the student is doing it."

CB: No, in his story, his published story.

GM: In his story he says that he is doing the CPR?

CB: No, that one of the students is.

GM: Alright, so there's another little fabrication of some kind, or maybe a mismemory or something.

CB: No, he was covering his butt. . .Caltech had to pay Papp something for the act that. . .I don't know what Caltech was responsible for.

GM: Do you have any idea what that settlement was? You know what Childers was paid.

CB: I only know what Childers was paid.

GM: But you don't know what Papp was paid?

CB: Roser might know.

GM: So the ambulance arrived. A couple of ambulances, perhaps? Or one ambulance?

CB: I don't recall whether there was more than one.

GM: But the Mattel guy was taken away, yes?

CB: Right.

GM: And later pronounced dead.

CB: Childers was taken away too. I don't know about the Rockwell guy and there was a piano tuner and somebody else.

GM: Tell me, after these injuries occurred, what happened to the whole crowd? What did the crowd do?

CB: Well, some of us went around and looked at the engine. Others just gradually drifted away.

GM: And what was the nature of the engine? What did you find when you looked at the engine?

CB: The first two cylinders, if you looked at the back of the engine being the one that's below the driver, the front of the engine that's where the fan was. The fan was gone.

GM: What was gone?

CB: The fan was gone and the first two cylinders were blown away.

GM: Blown away. So in other words, the cylinders were no longer visible there?

CB: The regular pistons were blown down to the end of the crank case. Now get this, they looked like shattered windshield glass.

GM: The steel on the piston faces?

CB: The pistons may have been aluminum. But this is just like if you took a rubber ball and soaked it in liquid nitrogen or liquid oxygen or something and then dropped it on concrete.

GM: That's what it looked like?

CB: Yes, it was shattered. The pieces were anywhere from a quarter inch to half inch pieces.

GM: On the steel or aluminum cylinder?

CB: Right.

GM: But the tops of the cylinder which encompassed or normally had the special Papp design, the closed head. . .

CB: I don't know where those pieces were.

GM: But wait a minute, those were the things that were blown away. Did you look for them?

CB: I didn't. I don't know whether anybody recovered them or not, but I see in another report that parts were sent to various laboratories to look for traces of explosive.

GM: What do you know about that? That's the key point.

CB: They could not detect any traces of any kind of explosives.

GM: Where did you get that information?

CB: Where did I get that? That was in one of the reports.

GM: The question I have is, and this is one of the most important reports that we could possibly ever get our hands on, where are any of these reports now and what is the best way of getting them, to your knowledge?

CB: I have no idea.

GM: Let us use your memory. You've got a great memory of many things, that you've demonstrated here. When did you see these reports, to your remembrance? Months later, weeks later, years later? When did you see them?

CB: I'm talking about years later in press reports.

GM: Press reports. But you never saw the actual. . .

CB: No. The only one that I saw was the one that I wrote myself.

New Energy Times Archive

GM: You wrote one yourself and that was stolen.

CB: My copy of it was stolen.

GM: TRW has another copy?

CB: Yes.

GM: Presumably.

CB: Somebody may have something in their archives. I'm not sure if they retained it or not.

GM: But you distinctly recall in press coverage of what might have been, let us say, and I don't want to put words into your mouth, what might have been coverage of the legal proceedings of the suits and so forth down the road, and there might have been some reports from some official party that said, "No explosives were found." *Might* have been?

CB: I have seen published statements. The San Jose [*Mercury News*] paper is the one where I saw that they had nothing like that. It's something on the internet somewhere.

GM: We'll have to get to the bottom of that. This is all just speculation. But you yourself believe that there were reports in the press that no explosives had been found?

CB: Right.

GM: We do have to establish that.

CB: That's public information somewhere.

GM: What happened after this event, when everyone dispersed, the injured were taken away, you examined the engine, what was next? What happened next?

CB: I had to go back to work, report back to. . .

GM: Was this a weekday?

CB: Yes. Ruttner was one of the observers. Ruttner accompanied me on this along with Childers from TRW and I think there were six TRW people total at this thing.

GM: What was the overall consensus of the TRW group at that point?

CB: I think everybody was just sort of shocked.

GM: Shocked, because someone had been injured and. . .

CB: And somebody was killed.

GM: But the person didn't expire on the spot.

CB: I think he was dead when they put him in the ambulance.

GM: Really?

CB: I think so, because he wasn't breathing.

GM: He wasn't breathing. So there was a deep sense of shock.

CB: But I thought for certain that TRW would go ahead with the thing.

GM: This was the second proof basically that an enormous power was being manifested.

CB: But they had a big conference; I had to sit in on it.

GM: That day?

CB: No, I think it was the following day.

GM: Okay, and what happened?

CB: There was about twenty Ph.Ds. These guys were all supposing of what Papp had planted in the engine to get this explosion.

GM: They were all presuming that he had planted explosives into it somehow?

CB: Right.

GM: That was the gist of the conference at TRW. So, what was the result after that meeting?

CB: TRW would have nothing to do with it.

GM: Who made that decision, to your knowledge?

CB: It wasn't even one of my immediate supervisors.

GM: So it wasn't you, because you would have advocated going forward, yes?

CB: Certainly.

GM: Of course. But Ruttner, what about Ruttner?

CB: Ruttner felt that they should go forward with it.

GM: And what about Cagle?

CB: Well, I don't know what Cagle thought.

GM: But Ruttner was there.

CB: Cagle was wishy-washy.

GM: But Ruttner was fine on it?

CB: Yes.

GM: But the upper management hearing from the Ph.D.s, you're saying, who were basically. . .Was it sort of a consensus or was there dissent?

CB: First of all, there was a liability involved because of the death, which they didn't want any part of.

GM: They didn't want that.

CB: The Ph.D.s were trying to instill the thought that there was some sort of explosive implanted and that he could blow it up like that.

GM: Why would he want to blow it up like that? What was their theory? What was the theory of why he wanted to blow it up?

CB: I don't know.

GM: Now Feynman in his paper says that he was afraid that it would be given a really good test and thus he wanted to sabotage the whole thing. That's what Feynman's theory was as pointed out in that *Skeptical* article. What do you think about that?

CB: It's Feynman's bullshit.

GM: That's what I would call it. But let's. . .and I'm not being impartial because I have a viewpoint on this. . .But clearly your opinion is, I presume, that even if Papp wanted to blow this engine up and Roser was in cahoots with him to blow this engine up somehow, or let's just say that Papp wanted to blow the engine up, why did they do it in front of a crowd?

CB: I think that Papp just told Roser he was going to blow it up and Roser couldn't do anything about it.

GM: Blow it up in the sense that "if they don't believe me, I'm

New Energy Times Archive

going to show them the real power by blowing it up," so to speak.

CB: Right. The conversation that I had heard weeks or days before. . .Moving on. . .

GM: Before you move on, one could speculate that Papp might have wanted in some sense the engine to explode and demonstrate its' power. I mean, that's possible that he wanted to do that. And even perhaps wanted to do it in front of a crowd, let's say. But of course miscalculated that all would be well and that someone might. . .

CB: That all it would do is blow it up, it wouldn't kill anybody. I don't think that was any plan on his part. Moving on, I got him to build four more engines like that.

GM: You got Papp and Roser to build four more engines like that?

CB: Right. I advised them what was needed in a testing program and that they did need to put it on a dynamometer. Warren Johnson built the parts for them. He contracted and he built the parts and they assembled the engine.

GM: And you were kind of at this point, since TRW was out of it, you were doing this yourself?

CB: Right.

GM: You were just advising them, so to speak.

CB: Eventually TRW terminated me.

GM: As a result of that?

CB: Yes, they told me to keep away from it.

GM: When you say terminated you, fired you?

CB: Did me off. Well, they didn't exactly fire me, they said I was excess personnel, and I felt that it was due to the aide that I had foiled from forming a separate corporation which we'd all participate in. He was up high enough that he could go down the line to tell the guys below what to do to me. So anyway, I kept in touch with the operation.

GM: While still being at TRW?

CB: While I was at TRW, and even after I got dismissed from TRW.

GM: How many weeks or months after the accident were you dismissed?

CB: I can't remember.

GM: Was it shortly thereafter or was it. . .

CB: Maybe it was a month or a couple of months. I can't remember.

GM: Okay, but you kept in touch one way or the other.

CB: I kept in touch.

GM: And four engines were built. Did you ever see any of them work?

CB: No, I didn't. But after they. . .Along about the time they were completed, I inquired of Joe if he had turned up the power on the variac before they plugged the thing back in. He says, "You'll never be able to prove it." Now what does that tell you?

GM: Does it tell something about his intent?

CB: It tells that he turned the damn thing up so that he could make sure that it exploded.

GM: You think so?

CB: I certainly do. That was my opinion and it's been my opinion. I've never voiced this because he was fearful that he would be imprisoned for manslaughter.

GM: Yes, of course.

CB: After this accident, Papp decided that 50% of the thing going to Roser was just a little bit too much. He wanted to cut Roser down and Roser stayed firm and they had a lawsuit and Roser won the lawsuit.

GM: Between Papp and Roser.

CB: Roser owned half of the process, the engine rights.

GM: And fighting over infinite money!

CB: Joe Papp says, "Well, screw you. I'll never, ever market the damn thing, therefore you won't get anything." He never did market it.

GM: What happened after that?

CB: He built a big engine. I did get to see the big engine. He had it in his garage in Torrance. He told me he could control that, he had a device where he could put a crank on the thing so he could turn it over to whatever position he wanted. He could control the thing so that he could stand on the crank and it let it lift him up.

GM: But there was a dynamometer, yes, at some point?

CB: That was many years later. He didn't have a dynamometer on it at that time.

GM: Why was he building a bigger engine?

CB: I think that may have been the biggest engine that he built. I'm not sure. I can't remember what year it was, but it was at least a year after the accident.

GM: Had they split up? Had Roser and Papp split up after the accident, after the lawsuit and so forth?

CB: Yes, they had parted ways. So anyway, at that time he showed me his gas processing arrangement with all of the glass tubes and the induction devices that he had to process the. . .

GM: Was it your impression, by the way, that this was legitimate processing material or do you think that was bogus to make it appear that something very strange had to be done and thus put other people off?

CB: No, I don't think that. I think for sure that he was convinced that this was necessary to get the results that he was getting. No one would go to that extreme just for show.

GM: But let me say that something in this entire Papp story doesn't hang together; much as everything does hang together in some ways, in other ways it doesn't hang together. The fact of the matter is that when he joined up with Roser he was not joining with Roser particularly to work on this engine, he joined as another kind of employee, correct?

CB: No.

GM: No? Because the news accounts suggest that, okay he was working for Roser anyway on refrigeration. That's false?

New Energy Times Archive

CB: That is entirely false. It was just the engine. He was only involved in the engine, he wasn't involved in Roser's other activities whatsoever.

GM: Did Papp ever tell you that he might have gotten some of this information about the gases from someone else, let us say back in Hungary?

CB: He never explained to me where the information came from.

GM: He either developed it or got it from somebody else.

CB: Right. To me, he impressed me that this was all his own concoction, that he had devised this system. He told me about his submarine. On that submarine story, if he disposed of that in the vicinity of where he built it, they should be able to find it. Otherwise they should look off the coast of France.

GM: Let's not go on that. The submarine story is very weird and to me it sounds very bad for Papp.

CB: He told me that he actually did it. He said that he scuttled the thing off the coast of France.

GM: So he really crossed the Atlantic in a submarine made by his. . .with some kind of unusual power source?

CB: Yes, with the same power source that he's using, the same concept that he's using and it only took a small tank of gases and he came all the way over.

GM: Obviously to me, that is one of the saddest things about the whole story. It doesn't seem to me to hang together. But again, it's a diversion. The most critical facts are your observation of the engine in the beginning, the explosion, and anything else that we might know. But he showed you—he, Papp—showed you his gas processing?

CB: He didn't explain it. He just showed me. He said, "This is the apparatus that I use to process the gases."

GM: And he always had that under his control? Did anyone else, to your knowledge, know how to use it or make it?

CB: At one time I had a duplicate of his gas processing thing here in my garage.

GM: What year was that that you had that?

CB: It wasn't operable.

GM: You didn't know how to operate it, it was very complex, yes?

CB: I think a lab at the University of Utah or Brigham Young University did the duplication.

GM: Why did they do that?

CB: Sparrow was involved with that.

GM: Why was it in your garage?

CB: I ended up with it and I had delivered it to Sabori over in Glendale. He was working with Will Bogden and Larry somebody. It may still be over there in Bogden and Larry somebody's shop.

GM: There were many other companies, as you know, that tried to resurrect this. One was called Noble Corporation.

CB: I was involved with Noble.

GM: That was in Salt Lake City?

CB: Yes, that's Sparrow. Noble Management.

GM: Are they still in existence?

CB: The corporation still holds and if the engine works he is supposed to have some marketing rights; that's all that he's asking for.

GM: But this has been years now that. . .Do you know other than the people in California any other people?

CB: No, I don't know any other people in California.

GM: Tell me, what is your overall feeling about the entire affair? We're seeing this from the perspective of the year 2003. Would you summarize your opinion about the Papp engine and what happened to it and where it's going or not going.

CB: I think it's a tremendous source of energy, but I don't know whether it is the most viable source. . .

GM: . . .The fact of the matter is, you at this stage in 2003 are what percent sure that Papp had a real process?

CB: I am 100% sure.

GM: And the most important piece of evidence, in your opinion, for that is?

CB: The overall. Take the overall of the things that I have observed. It is convincing enough for anybody. Let me continue on. A few years later, I am telling this story to a guy that I had invested with in ion equipment. He says, "Well, you should talk to my partner." The partner is Maurice Scott. Maurice Scott was financing Joe Papp on his motor in their Santa Ana episode. At that time I tried to get back in contact with Papp and Papp would have nothing to do with me.

GM: He was mad that TRW had pulled out.

CB: He was afraid that I was going to reveal that he blew up the engine intentionally. At least that's my perspective. . .

GM: . . .Can you tell me about General Dynamics, wasn't there an episode in which General Dynamics actually had the device in its' possession, yes? And it was working. That was the report that I think was in the newspaper.

CB: I don't know. I do know that they did. . .They were going to do an explosion. They had the device in a 55 gallon drum filled with sand and Baylen set the thing off before they were supposed to. That's the only thing that I got out of it.

GM: I also heard about Papp going out into the desert, wrecking it somehow beforehand, and then shooting himself and claiming that the KGB was after him or something like that.

CB: We had an episode similar to that at TRW.

GM: Really? Tell me about it.

CB: Papp disappeared for two or three weeks.

GM: He did? This was before the explosion or after?
CB: Before.

GM: Before? And he disappeared for two or three weeks?

CB: I guess, from the story that I got, that TRW was demonstrating to him that he could disappear and nobody would know where he was. But they could protect him from whatever forces he was fearful would get him. So that's the only thing that

New Energy Times Archive

I know on that.

GM: Well, this is an enormous amount of material that you have given. . .I thank you so much for what you provided. The key thing that I'm going to go after at this point is that accident report about the engine. I have called Caltech in the past and believe it or not their News office, which isn't necessarily the brains of the whole place, they got back to me and they said they had no record of anything. They were not sticking up for anything, they just did not know any better and had never even heard of Papp. Remember this is the year 2003, so something—the "memory hole"—has been active in sucking everything up. But I'm going to call the Gardena Police and I'm going to find out what was done. Someone told me that SRI got involved with an accident report. Did you tell me that?

CB: No, I didn't tell you that. Not to my knowledge did SRI get into the thing other than that they had made arrangements to deliver the engine to them.

GM: Well, Cecil, why don't we cut off now. You've been most generous with your time. I never expected we'd talk this long about it. But number one, you have a great memory about your own life and to me, the new facts that have emerged about the Feynman performance are even more damning than I thought before. And the fact is the observations that you made about the damage are quite incredible. And if it can be established for the engine destruction as it was pretty much for the cannon experiment, that there was no explosive introduced into that, then that indicates. . .

CB: Other than the 10 or 11 cc's of gases that become violent.

GM: Violent is an understatement.

GM: Well there's a lot to look up. I'll probably have more questions for you, Cecil.

CB: One more thing. . .

GM: Yes, what else would you like to mention?

CB: I have little vials of those gases in my garage.

GM: You do? I knew you would have that. But they're all probably contaminated or whatever and they're not going to do anyone any good.

CB: I have mixed those gases with an electrical charge and I have gotten a poof.

GM: You have gotten sparks?

CB: I have gotten a poof.

GM: A poof.

CB: I don't want a bang; I want to live. I know for a fact that the gases can be mixed and can be treated and you can get a reaction from them.

GM: I tend to believe it. I just don't know what is required. We have colleagues in Minnesota [Mark Hugo and Blair Jenness] who are now getting detonations with mixtures of argon and helium, I believe. He is getting nice detonations that are causing up to 30 psi type pressures, and there are other people getting detonations as well in noble gases. And there may even be some written material that Papp left that some group has or does not have or someone has, that actually documents what needs to be done to mix and make the gases.

CB: I have copies of all the blueprints of his engine. I think I have.

GM: But you don't have plans. . .You don't have anything other than what's in the patents? You don't have any other documentation on the gases?

CB: All the drawings far exceed what the documentation is in the patent.

GM: You said at one time you had the gas apparatus, or a copy of it, in your garage. What happened to it?

CB: I took that over to Sabori.

GM: Sabori. So they have it? But who built that?

CB: Either Brigham Young University or Utah. Sparrow would know who built it because he's the one that had it delivered to me. At one time I started to resurrect the thing, but I spent $400 or $500 on glasswork for it but then I gave up on the thing because there was so much other stuff.

GM: I'll have to revisit with you, my friend, because you told me some earlier things about your own work and I'd like to follow up on that at some other time. . .Thank you so much.

CB: Thanks, Gene.

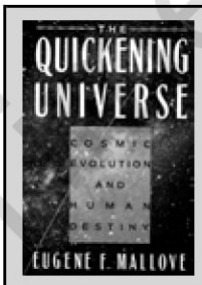

The Quickening Universe:
Cosmic Evolution and
Human Destiny

by Dr. Eugene F. Mallove

$10.00 North America
$15.00 Foreign

286 pp., Hardcover, 1987

New Energy Foundation, Inc. • P.O. Box 2816 • Concord, NH 03302-2816
Phone: 603-485-4700 • Fax: 603-485-4710

21st CENTURY
SCIENCE & TECHNOLOGY

Featured in a Recent Issue

- Violin Building and the World of Harmonic Sound
by Caroline Hartmann
- The "Solar Jerk," the King-Hele Cycle, and the Challenge to Climate Science
by Rhodes W. Fairbridge
- A Saga from the Dawn of Interplanetary Travel
by Krafft A. Ehricke
- Was the Antikythera an Ancient Instrument for Longitude Determination?
by Richard Sanders

Subscribe!

$25 for 6 issues (U.S.); $50 for 6 issues (Foreign)
Single copies $5 ($6 Foreign)
Send check or money order (U.S. currency only) to:

21st Century, P.O. Box 16285, Washington, D.C. 20041
www.21stcenturysciencetech.com

New Energy Times Archive

A REVOLUTIONARY ENGINE

That Operates for 15 Cents Per Hour Without Gasoline, Air, Combustion, or Exhaust

MAY BE NEAR

Bob Said

Reprinted from Private Pilot, December 1968. This article presumably went to press prior to the engine explosion incident which occurred in November 1968. Private Pilot indicates that they will "keep a watchful eye on the Papp engine project," but to our knowledge no further coverage was given.

No-Fuel Engine: Hungarian-Born Inventor Joseph Papp Has Applied for Patents on a Secret "Expanding" Gas Which Powers Engine

Consider this: with such an engine, every Aeronen, Cherokee, and Skyhawk in the land would have the range to fly non-stop to Europe, Hawaii, or Japan. Or anywhere else, for that matter. Military patrol planes could stay aloft as long as the crew could hold out. You could "gas up" the family lightplane once every four or five years. On a Skyhawk, for example, your takeoff weight might be as much as 500 pounds less than it is now, because you'd be lifting about half as much engine weight, no gasoline supply, no tanks, fuel accessories, etc. That would leave weight allowance for a couple of more passengers, and you'd still have unlimited range. Nobody would ever "run out of gas" again. The astonishing possibilities go on and on.

Let's take a hard, skeptical look at this engine. It was designed by a Hungarian-born inventor named Joseph Papp. He and financial backer Don Roser, who have set up a firm called Environetics, Inc., to develop the engine, are saying mighty little about the details of what makes it work until their patent applications have been granted. But this much they will say:

The engine operates on a charge of gas blends, hermetically sealed inside each cylinder above the piston. A charge of low-voltage electricity, which can come from either a 12-volt or 24-volt source common to light aircraft, is used to create an electrical field in or around the cylinder. This causes the gas to change from its original form to a new form which requires more space. As it expands it does two things: pushes the piston down and creates—they aren't saying how—the conditions for returning to its original form. The heat generated by its expansion is absorbed by its contraction. When it has contracted, another charge of electricity causes it to repeat the expansion-contraction cycle, and so on *ad infinitum*. When this sequence of events occurs in an orderly phase among four, six or any convenient number of cylinders, suitably connected to a crankshaft, you get useful work.

How much work? It's pretty much a paper solution at present, but the developers say any amount you want, from the amount necessary to drive a lawnmower on up through automobiles and airplanes to the amount needed to power a locomotive or a battleship.

Inventor Papp had been working on the concept for years when he immigrated to the U.S. by way of Canada not long ago, and was hired by Roser's firm, which manufactures refrigeration equipment and store fixtures. A few days after he went on the payroll Roser decided to put him to work on a "crash" basis to develop an engine which would actually run, to prove the concept. And develop it he did, in six weeks.

A four-cylinder, 90-hp Volvo automobile engine was chosen as the basis of the rig. Only the "short block" was used—the cylinder head, intake and exhaust valve assembly, and accessories were discarded. On top of the Volvo short block Papp set an aluminum block bored to match the Volvo cylinders. It contains the sleeved, hermetically sealed cylinders and pistons which are the heart of his engine. He bolted the bottom of his pistons to the top of the Volvo pistons, injected the charge of his mysterious gas, hooked all manner of wires and gauges to his test board, and fired her up. (Under optimum conditions, incidentally, he says no starter is required. Just turn on the juice.)

Among other things, he operated the engine for 85 minutes at 4,000 rpm in a closed conference room full of interested potential customers. Any ordinary engine would have knocked them all out with monoxide poisoning. This one didn't. What it did do, according to the test board, was generate "between 50 and 75 horsepower per cylinder" at 4,000 rpm, which speaks well for the strength of the Volvo connecting rods and crankshaft. They were never intended to take this kind of knocking around. Roser said the little four-banger was generating "better than 300-hp," based on known displacement and measured pressure. Under normal operation, he said, an engine designed from the ground up on the Papp principle would generate about 800 pounds per square inch in each cylinder.

Roser stressed that what Papp has done is design a fuel, not an engine. The secret blend of gases is the key. Using a power source to move pistons and a crankshaft is old hat to reciprocating engine technology. And Papp's "key" can be applied to turbine technology as well.

One big market area Roser is eyeing is the automotive field, in which a smog-free engine that exhausts nothing into the atmosphere would be bound to make many friends.

New Energy Times Archive

It might make many enemies, too, and this brings up an aspect of the story about the Papp engine which has troubled this reporter since he first heard about it. Clearly, an engine with these revolutionary characteristics, and with so many obvious military applications, would confer an enormous technical advantage on the nation which possessed it. Not only militarily, but commercially as well: it would be mighty hard to compete in the world's marketplace against such an engine, if all you had to offer were conventional gasoline and diesel powerplants. This being the case, why invite the attention of the bad guys before you have iron-clad patent protection and a going, proven product? If the Soviets don't already have such a fuel concept, they are likely to be mighty interested in this one. The world petroleum industry, and the financial community itself, might be a little uneasy about a concept which could conceivably put a permanent end to the use of petroleum fuels in all of the non-nuclear engines of the world. The auto and aircraft engine people ought to love the idea, because if it will do what its developers claim, the Papp power concept would result in better engines for these applications than any other in sight. But engine builders are as susceptible as anybody else to financial pressure, and the imminent end of gasoline sales throughout the world would be bound to generate a trifle more than a modest twinge on Wall Street.

Moreover, any reasonably sophisticated reader will wonder about safe, tidy little scientific ideas like entropy, conservation of energy, and one or two others. Because they are unwilling to divulge hard details on the concept until patent protection is complete, Papp and his associates leave us nibbling at these annoying problems.

But then, the scientific community thought Edison, Marconi, the Wright Brothers, and Robert Goddard were out of their minds, too. And look what they did for us. So don't scoff too soon. After more than two decades as reporter and editor for newspapers and magazines from coast to coast I have been exposed to more than my fair share of perpetual motion machines, miracle cancer cures, devices for communicating with poltergeists, methods of extracting gold from carrots, and similar schemes. I do not recall one which caused my reporter's instinct for a good story to resonate more strongly than Papp's engine does. But then I figured Dewey was a shoo-in over Truman, too, so it all comes out in the wash.

It must be stressed that, at the time of this writing, the Papp engine was an unproven engine. It had been started some fifty times, run a total of "several" hours, and operated continuously for 85 minutes on its longest run. It had never been connected to a dynamometer to actually measure its power output. Roser pointed out that there was little point in this because the block, connecting rods, and crankshaft of the existing engine were Volvo components, not Papp components, and there was little point in testing them. The company's desire is to associate itself with a major engine manufacturer and allow it to do the development work and market the product under license. As Roser notes, "A firm like that is equipped to do such work. We're not, and it isn't the business my company is in. But we have the product, and nobody else does."

Developed as inventor Papp envisions, it would be quite a product indeed. It would have a one-to-one horsepower to weight ratio. Only a quarter-inch of metal is needed to surround the cylinders—no water jacket or cooling fins. They'd be so much useless weight. The engine could be mounted inverted or vertically to power a rotor. In an auto application Papp says an rpm range comparable to those of diesels would be used, but the optimum for the system is 2,500-3,000 rpm, which is right in the aircraft range. And Roser says the acceleration and deceleration characteristics are "practically instantaneous—much better than existing engines. We have instant rpm." At the time of manufacture each cylinder would be charged with the special gas, and Papp's calculations indicate 60,000 automobile miles or 1,000 operating hours for aircraft engines before a recharge would be needed. There is no abrupt fall-off in power output when a gas charge "gets old," so fuel exhaustion in flight becomes a thing of the past. When recharging time rolls around, Papp says a supply of fresh gas would cost "about $25 per cylinder." Compare that with your current gas bill, economy fans. Can you operate your six-cylinder engine for roughly 15 cents per hour now, even in economy cruise?

Because the engine is not aspirated, it would retain full power up as high as the wing could lift it. That would result in tremendous boosts in true airspeed for any lightplane on the market: better even than super-charging, without the expense or weight of a super-charger. In fact, the engine would continue to function perfectly in space, and Cal Tech's Jet Propulsion Laboratory is looking at it with that in mind. It would never suffer from carburetor ice, clogged fuel lines, or spark plug failures—no spark is introduced inside the cylinder. O-rings were used to achieve a hermetic seal in the Volvo prototype, and pressure lubrication was employed, but other techniques would be used on a production engine, according to Roser.

The absence of gasoline removes all fire hazard, and the operating gas itself is not combustible, Roser says. The closest he will come to identifying it is to say that "it is like, but is not, hydrogen, helium, etc. The components are readily available and not expensive."

All of this tends to make the mouth water, but it is predicated on two of the largest letters in the English language—I and F. Until Environetics—or somebody else—builds one of these engines and submits it to exhaustive performance tests, nobody will really know if it develops as much power for as long as Papp and Roser say it will. IF somebody does, and IF the engine performs as advertised, a giant revolution is about to happen to engine technology and to light aircraft design as a spin-off. More space and weight allowance for people, less for hardware, and major improvements in performance and economy inevitably would follow for the fly-for-fun set. And IF all this comes about, Standard Oil had better consider a vigorous diversification program.

IF, on the other hand, there is a fly in the ointment and the Papp fuel concept craps out at the showdown, somebody else will probably take a new slant and keep on trying. After all, your heart just sits there expanding and contracting, and it, too, requires only periodic refueling. If somebody can figure out a way to make a couple of cupfuls of gas behave the same way inside a cylinder, without suffering unpredictable coronary attacks, we'll get a simple, cheap, reliable engine some day.

Private Pilot will keep a watchful eye on the Papp engine project, and keep you posted on interesting developments. Meanwhile, if you can't resist writing somebody about it, don't write us; send your cards and letters to Environetics. ❐❐❐

New Energy Times Archive

The Argon Engine Development Project

An interview by *Infinite Energy* Editor Eugene Mallove in 2003 with the principals of the Minnesota-based "Argon Engine Development Project"—an effort which hopes to lead to super-efficient conversion of energy to electricity from a new primary energy source—a noble gas plasma technology.

Eugene Mallove: Who is involved in the Argon Engine Development Project? What are your credentials and how did you develop an interest in this work, which derives from Josef Papp's claims?

Mark Hugo: I have worked as a utility engineer in the nuclear power industry for twenty years, until 2000. My background includes formal degrees in chemical, mechanical, and metallurgical engineering, and I have professional engineering certificates in electrical and mechanical engineering.

During the 1989 to 1999 timeframe, I worked on "cold fusion" as a hobby. I published in the *Proceedings of the 4th International Conference on Cold Fusion* (ICCF4): "A Home Cold Fusion Experiment." I was the only person to be published in those Proceedings for home-based laboratory work at that time. (Others, of course, have followed.)

In 1998, I began to investigate the so-called "Papp Engine." After locating the publicly available patents of Josef Papp, I was able to visit the "lab" of James Sabori, in Los Angeles. Sabori was working on what appeared to be an attempted "resurrection" of Papp's work. Certain concepts were discussed that enabled me to make connections with aspects of "cold fusion," and this inspired the work direction undertaken with the Argon Engine.

My interests other than technical areas include competitive in-line skating and work with a variety of choral ensembles. Some of my choral credits include a year with Opera Omaha, "Aida" and "Tales of Hoffmann," and seven years with the Omaha Symphonic Chorus, including performances of Beethoven's 9th and Mahler's 2nd.

Blair Jenness: My electric utility experience includes leadership and management roles in energy facility systems and industrial operations. As a general manager in energy management and power production, my domestic and international assignments have included overseeing facilities with more than 500 employees and $80 million annual budgets and the world's largest fluidized bed boiler retrofit project (135 MW).

I develop integrated energy solutions for large energy users, independent power producers, and their suppliers. My corporate and consulting expertise includes project due diligence and operational modeling, commercializing experimental technologies, energy system analysis, and power plant performance. I also have a background in business development, labor relations, contract negotiations, and team development.

My background and interest in the Papp technology are derived from experience as a licensed senior operator for a 1,670 megawatt thermal boiling water reactor. Other key background include my undergraduate studies in elementary particle physics and nuclear engineering. This included a paper that conceptually described an approach for a lower energy (lower temperature) fusion reactor based on counter rotating colliding field. I have pursued advanced education in business administration, labor relations, and computer sciences. My community activities have included serving as Mayor, Council Trustee, and City Utility Commissioner for my local city.

Eugene Mallove: You have done both literature searches and experimental work and have talked to many people working in the field of the Papp engine. What is your impression of it all—both the good and the bad?

Mark Hugo and Blair Jenness: Our literature research resources are taken from seemingly disconnected investigations, but which have proven—we believe—to have strong connections with the Papp process. It is typical for researchers to focus on a specific result and to exclude information that seems to have little relevance to their objectives. We had no specific information on the Papp process, therefore in a search for references with some bearing on the Papp process, we were forced to review research in a wide range of disciplines. As a result we have identified over a dozen different established and published research areas that have strong implications for the Papp process.

Eugene Mallove: What do you think about Josef Papp, about Richard Feynman, and about any other figures in the Papp field whom you wish to describe?

Mark Hugo: Easily found on the Internet (search under "Joseph Papf") is an account by Richard Feynman where he describes witnessing a demonstration of the first Papp engine in 1968. During the demonstration, Feynman observed that a 110 volt cord was going from the control panel into a wall socket. He asked Papp if he could unplug it. According to the article, Papp gave him permission. However, Papp became very anxious the longer the 110 volt power was disconnected. Feynman attributed this anxiety to the idea that the energy being expressed by the engine came from this 110 volt source.

Eventually, according to Feynman, Papp grabbed the plug from Feynman and plugged it back in the wall outlet. Shortly thereafter a loud explosion occurred. The engine disintegrated into several large pieces, some becoming lethal projectiles. Feynman attributed this to a "rigged" explosion by Papp. However, Feynman's analysis failed to account for the energy that would be necessary to operate and then destroy the demonstration engine. This is especially true because a single 110 volt extension cord circuit is incapable of supplying the energy necessary to produce such destruction.

To cite a comparative example, during my years in the Civil Air Patrol, I experienced a catastrophic engine failure, which resulted in an emergency landing at the U.S. Air Force base in Palmdale, California when a "jug" blew up on a Convair 440 radial engine. From this experience I established a datum for a typical conventional explosion failure in a high-powered piston engine. Fundamentally, pieces of cylinder metal were scattered in the thin aluminum cowling

New Energy Times Archive

of the engine, with no significant damage to this cowling or other nearby components.

Thus, the quality of Feynman's analysis is quite telling. If he had analyzed the explosive power needed not only to "topple" the engine, but also to shatter it into several large fragments, including the projectile energy, he would have found that the high-energy event he observed was considerably beyond the capabilities exhibited by conventional fuels. And the explosion pattern would probably not have matched that of surreptitiously placed explosives—one of Feynman's theories about what Papp had done.

In researching the matter, we interviewed an engineer from TRW Corporation, who was scheduled to witness this demonstration, but who missed it. This gentleman assured us that Papp did have an operating engine, but with an unknown output load. That is, at that time there was no dynamometer or other means for accounting for output power. Papp was evidently still in the process of formulating a complete engine design and operating theory.

Eugene Mallove: Describe the general experimental program that you have followed with the Argon Engine.

Mark Hugo and Blair Jenness: Our first objective was to confirm Papp's claims by reproducing his description of an anomalous energy release from a mixture of inert gasses that are subjected to a variety of excitations.

Then, just as Papp moved from the pure "explosive" power in his first patent to the controlled utilization of the energy through the subsequent engines he patented, we created conceptual plans of simple and sophisticated apparatus to extract commercial energy from the phenomenon. Here is an outline of our testing program to date:

A. Aluminum Chamber Static Test

First tests with noble gases were conducted in an aluminum cylinder. We ran a sequence of tests that allowed us to simulate what was depicted in the first Papp patent. Initially we were successful in raising only slight pressure pulses when the electrical filaments burned out. After about three months, the flashes—as observed through a 0.5" Plexiglass view port—became more and more brilliant as we varied parameters and more closely replicated Papp's original work.

To compare this testing to something more familiar, we were energizing the test chamber in a manner that is akin to running a standard incandescent light bulb at reduced power. The effects we observed with these noble gas tests cannot be correlated in any way with incandescent bulb operation. For example, when standard light bulbs burn out there is no significant material deformation of the filament, which is significantly different from our experimental results.

We then made a fundamental discovery with regard to Papp's original set up. Although the information is embodied in the patent, its significance is obscured, as there is no direct call out of its importance. We do not think this was fraud on Papp's part, but a case where he did not understand the significance of several aspects of his work at the time. We are presently holding this as proprietary information.

B. Desiccator Jar Static Test

As we developed greater understanding of Papp's first two patents, we progressed with our next device to a clear, heavy walled glass jar (a chemistry desiccation jar) with modified internal features. Video tapes and data acquisition chart recorders were used on all of these experiments. This allowed us to observe and record the noble gas "flash events" in a more comprehensive manner. We began to produce pulses of increasing pressure. This unit included an improved "fail safe" design for safety. It was designed so that the pressure could now be greater than atmospheric while still enabling a large pressure pulse to be vented by blowing the gasket seal between the head and the vessel in a controlled manner.

With the new set up we observed damage to high temperature components (ceramics) as the anomalous events occurred. Note: The melting damage to the ceramic components occurs at greater than 2,600°C (4,712°F), while the supporting aluminum components, which melt at ~660°C (1,200°F), were undamaged. This implies a localized intense energy release in the multi-kilowatt per cubic centimeter range. We also consistently observed physical responses that were anomalous from the perspective of standard thermodynamics. For example, there were periods of time, almost an hour long, where a continuous input of 30 to 50 watts of electrical power resulted in no pressure increase observed inside of the test chamber. Then, as mysteriously as this pseudo-equilibrium would appear, it would disappear and the pressure/temperature responses would return to those predicted by thermodynamics.

C. Active Tests with a 3.5" Diameter Enclosed Piston-Cylinder

We have now moved to a system that involves a floating piston with a coil spring return. This improved design has enabled us to produce multiple pressure pulses. We have also recently added a pneumatic piston gap adjustment, which allows us to more precisely control initial conditions. It is now also possible to study the influence of the piston movement during the subsequent discharge transient.

Eugene Mallove: What have you seen in your experiments that convinces you that this is an important discovery of new phenomena? For example, tell us why the "detonation" phenomena you observe, the overpressure, the blinding light, etc., coming only from a noble gas mixture is significant? Do you have something that is reproducible and incontrovertible?

Mark Hugo and Blair Jenness: In the aluminum cylinder and desiccator jar tests, we consistently found sudden filament failures, which had no connection with time of heating, and other factors. We observed massive damage to a shielding ceramic that was placed around the filaments. Damage was evident that implied an immediate transition from a "red hot" ceramic to molten ceramic. In this molten state the ceramic would be "blown about" the inside of the test device—explosively dispersed. At the same time there was no similar damage to aluminum components that were in contact with the ceramics at the point of the ceramic damage! Aluminum melts at about 660°C (1,220°F). The ceramics melt at 2,600°C (4,700°F) and above. Thus the observed behavior can only be explained by a highly localized energy release.

Calculated energy dissipation showed energy outputs that were far beyond the input energy. The calculations were based on the "basic physics" of the energy transient needed to melt the ceramic and subsequently displace it.

Active Tests: The result of the floating piston tests have been encouraging. However, we have not demonstrated

New Energy Times Archive

more than 1:1 energy ratio on the input versus mechanical output at this time. We have, however, obtained the following result as of the last three months in the first half of 2003: Changes to the design have brought us in line with three well-known Nobel Prize-winning physics concepts that we believe are implicit in the 1984 Papp engine. These changes have increased our pressure pulses to the 30 psi range (pounds per square inch; 1 atm = 14.7 psi), from lower levels of 3-6 psi for the same energy input. Since there was no fundamental change in the base physical set up of the apparatus, we are attributing the pressure pulse (and dramatic mechanical energy output increase) to "zeroing in" on the desired original "Papp reaction."

Because of economic considerations, the vast majority of our tests have been made with two of the least expensive noble gases. We have great confidence that we are carefully moving in the right direction. We have even more reason to believe that when we do work with the complete Papp mixture, the result will be markedly improved.

Eugene Mallove: What questions remain and what do you hope to do in your research program?

Mark Hugo and Blair Jenness: We have been totally self-funded up to this point. Our expenditures for equipment have been modest—approximately $10,000 between the two of us. We have benefited greatly from the effective uses of a variety of surplus equipment. For example, we have ten digital channels of data gathering from three digital oscilloscopes. Total cost was under $400 for these scopes. (In 1982-1986, these scopes would have cost about $50,000 retail.) All of the scopes needed minor technician work to be made usable. We performed that ourselves.

We have begun to collaborate with a commercial entity whose interest has progressed to the point of offering assistance and leadership in raising additional capital. Interested parties may contact us at Threespot@aol.com or BlairJ9500@aol.com.

Current self-funding has limited our focus because of the necessity to maintain incomes by engaging in other consulting jobs. We typically work two full days per week on this project. We feel that six to eight months of concentrated work would allow us to obtain a greater than 1:1 power ratio with the piston system and to define a basis for an initial commercial design for electric power generation. We also have a confidentiality agreement with a major land grant university. We are not adverse to using donated resources at this facility to support and aid this development work.

Eugene Mallove: Do you have anything else you wish to add—

Figure 1. Second generation test apparatus. Glass container reveals electrically stimulated flash and pressure pulses in noble gas mixtures—as seen in this video capture sequence. Flashes and pressure pulses occur on "filament burn out." This was not a "controllable" device.

New Energy Times Archive

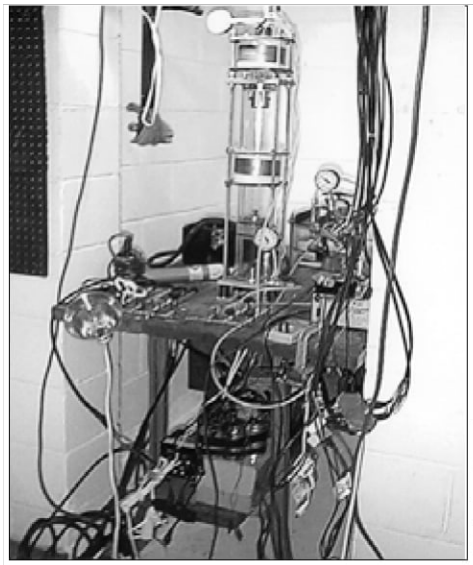

Photo by Mark Hugo.

about the theory of the noble gas processes you are working with and their possible relationship, if any, to cold fusion?

Mark Hugo and Blair Jenness: Based on various calculations we have made in the last three years, we have concluded that the only reasonable explanation of the energy release from this device is the direct conversion of matter to energy. Confirmations of any such specific mechanisms are the subject of future research. As in the case of Papp, we do not believe that having a complete understanding of all the physics involved in this process is a prerequisite to developing a successful commercial device. We do believe that we have added to Papp's original understanding of the process.

As in the results from "cold fusion" work, we have discovered that a synthesis of unusual field effects and materials can result in producing unanticipated phenomena. Rather than spend hours and hours of theoretical time trying to "explain" such results, we are dedicated to a far more empirical approach. We believe this approach will allow us to perfect a successful commercial device. ❐❐❐

Figure 2. Third generation test apparatus with movable piston. Pulses (detonations) in noble gas mixtures are now totally controlled, up to 30 psi each, with high speed movement of piston evident—up to 7 cm excursion. Testing is being done to prove over-unity conditions—pulse power (output) versus input power.

ISSN 1684-7288

NEW ENERGY TECHNOLOGIES

published by Faraday Lab Ltd

Magazine about alternative energy sources and advanced aerospace systems

6 issues per year:
$30 (on-line), $60 (printed), $90 (both)

Lev Tolstoy Str. 7, St. Petersburg, 197376, Russia
Email: office@faraday.ru

www.faraday.ru

Tesla Energy Conference & Exposition

November 8 & 9, 2003
Sheraton College Park Hotel
4095 Powder Mill Road, Beltsville MD 301-937-4422

Celebrating the *Wardenclyffe Tower Centennial* (1903–2003), Nikola Tesla's wireless transmission of energy, & other Tesla inventions with world renown Tesla energy experts: Dr. James Corum, Dr. Kenneth Corum, Dr. Elizabeth Rauscher, Marc Seifer, Dr. Konstantin Meyl, Dr. Gary Johnson, British writer, Keith Tutt, Gary Peterson, Ralph Suddath, Tesla's grandnephew, Bill Terbo, Dr. Bob Bass, Bill Wysock, Dr. Tom Valone

Integrity Research Institute

Early registration discount: **Integrity Research Institute**
1220 L St. NW #100-232, Washington DC 20005
800-295-7674, 202-452-7674, Fax: 301-513-5728
email: iri@erols.com

www.IntegrityResearchInstitute.org

EXCESS HEAT & Why Cold Fusion Research Prevailed
Charles G. Beaudette

THE SECOND EDITION offers a greatly expanded presentation of the evidence for (1) low level nuclear reactions as the source of excess heat, and (2) the discharge of excess heat without the presence of an input excitation energy.

Paperback: $29.95 North America, $36.95 Foreign
Hardcover: $41.95 North America, $47.95 Foreign

2002, 440 pp.

(Prices Include Postage)

New Energy Foundation, Inc.
P.O. Box 2816
Concord, NH 03302-2816
Phone: 603-485-4700 **Fax:** 603-485-4710
http://www.infinite-energy.com

SEEING RED
Redshifts, Cosmology and Academic Science
by Halton Arp

Paperback, 314 pp., 1998

Seeing Red:
Redshifts, Cosmology, and Academic Science
by Halton Arp

$26.00 North America
$31.00 Foreign

New Energy Foundation, Inc.
P.O. Box 2816
Concord, NH 03302-2816
Phone: (603)485-4700/Fax: (603)485-4710

New Energy Times Archive

The Tangled Saga of the Papp Engine:

Attempts to Revive It

Heinz Klostermann*

I am pleased that *Infinite Energy* decided to cover the story of the Papp engine, because it is not only fascinating and complex, but it is also extremely important. I am glad that I was, in part, a catalyst to making this reporting come about—after my own investigations over the past several years. In the interest of proper disclosure, let me say that I have patent applications pending on a "free piston generator" engine design, which would employ the Papp energy source to drive it.

The now over thirty-year time delay in getting Papp technology to market has been a tragedy. Central to the entire story was the explosion accident at Papp's first public demonstration of his engine, which occurred in Los Angeles in 1968 and at which about seventy people were present, including physics Nobel laureate Richard Feynman, a professor at Caltech at the time. Engineer Cecil Baumgartner, one of those who witnessed the explosion and with whom I have discussed this episode at length, is still very angry at Richard Feynman and his "immovable skeptic" attitude toward the Papp engine. [Editor's Note: See an interview with Baumgartner in this issue, p. 31.] This 1968 event and the false reports about it—due largely to Feynman—began the undermining of the controversial technology.

Certainly Feynman did not understand human behavior very well. He probably expected that a guy like Papp would give up after the accident in Los Angeles—but this was Papp's life work and he remained devoted to it. In fact, Papp got back on his feet very soon after the incident. He received money from the insurance payments for the accident and the out-of-court settlement with Caltech.

About mid-1969, Papp entered into an agreement with General Dynamics Convair Division in San Diego. Convair established a laboratory for Papp. The Convair engineers have reported that Papp was a hard worker and he knew what he was doing. But Papp did not stay long with Convair, because he did not trust them—he was in general a paranoid person, which was one of his great flaws. Reports are that he got another motor running again in 1969-70; it was called "The Big Mother." They planned to put it into a bus and drive to San Clemente, President Nixon's "West Coast White House," to prove that the motor was for real. There are many details about all this in the article in the *San Jose Mercury* newspaper, which was published in August 1989, about six months after Papp died. [Editor's Note: Reprinted in this issue, p. 14.]

By 1970, Rockwell International, TRW, and Convair had been involved in one way or another with the Papp matter. But the late Don Roser of Environetics, Inc., who funded Papp with about $500,000 and established the first lab for him after Papp had arrived from Canada, was first to be involved. It was around 1970 when Papp met Ernie Engel at an automobile show in Los Angeles. Engel was an entrepreneur-promoter, who quickly fell in love with Papp's vision and plans. So Engel put up personal money, the first $100,000, and Papp International, Inc. was formed. During the next ten years Ernie Engel raised another approximately $2.5 million for Papp International. Papp had filed his first two patents in 1968 under Environetics, Inc. The patents were granted in 1972. One patent [U.S. #3,680,431, "Method and Means for Generating Explosive Forces"] is for a "bomb" mechanism to demonstrate the explosive effects of the noble gas process, and the other [U.S. #3,670,494, "Method and Means of Converting Atomic Energy into Utilizable Kinetic Energy"] is for a piston-and-crankshaft motor that would use Papp's explosive noble gas process. I am lacking many details of the story for the period from 1970 to 1980, but I continue to learn more every year.

About 1983, Ernie Engel quit Papp International, because Papp had received a lot of money, but he had produced no real further results. Prior to 1983, Papp had taken a lot of time off his engine work—he had travelled to South Africa, China, and many other places. Meanwhile, through Ernie Engel and his friends, Papp was introduced to Rohner Engineering. Rohner Engineering at the time had about 120 employees. The company worked exclusively in combustion engineering; it built prototype motors for larger companies such as Caterpillar, John Deere, and others. Papp bought a "mansion" in Daytona Beach, Florida and moved his family there from Los Angeles. Papp himself was given a second home from Bob Rohner in West Liberty, Iowa, and they started to build Papp motors similar to the one which is described in U.S. Patent #4,428,193, "Inert Gas Fuel, Fuel Preparation Apparatus and System for Extracting Useful Work from the Fuel." The patent was filed in 1980 and was granted January 31, 1984. It expired in 2001; the earlier patents had expired in 1989.

From 1980 on Papp concentrated on building some ten Papp engines. He must have been very sure that the motors would work, otherwise he would not have started to build ten of them. Bob Rohner and his brother Tom reportedly invested about $500,000 in this effort over some ten years, until Papp died in mid-April 1989. In the early to mid-1980s Bob Rohner and Papp did get a motor running again, but with a limited output of about 10 kilowatts. It was amazing, as Bob Rohner has stated—to this day Rohner does not doubt the engine at all, but Papp was not happy. Papp had

New Energy Times Archive

hoped that his two-piston crankshaft engine could produce an output of 300 to 500 kilowatts. Rohner is the one who may have worked closest with Papp for the longest period and Papp had assured him that he would get a license from him to manufacture Papp engines.

We now know that nothing came of this for Bob Rohner. He fell on hard financial times, but he is still in business today in West Liberty, Iowa. He had to downsize his enterprise to about a dozen people. In any event, mechanical combustion engineer Bob Rohner, his electrical engineer brother Tom, and Papp built these motors and improved their performance. About 1985 Bob Rohner himself conveyed a working Papp motor to Florida.

As I mentioned earlier, Ernie Engel quit Papp International, but new investors were brought in through Bob Sparrow of Salt Lake City. Sparrow owned an insurance agency, but is retired now and still living in the Salt Lake City area. In the 1980s, wind power as an alternate energy source was heavily promoted—in particular in northern California's Altamount Pass in Livermore, next to the Lawrence Livermore National Laboratory and in Southern California, near Riverside. Bob Sparrow had been a promoter for this wind power alternative energy source. Jim Sabori was active in building foundations for these windmills. During a promotional meeting for windpower, Jim Sabori got involved with Bob Sparrow, who had at that time become a friend of Ernie Engel. Bob Sparrow to this date is still trying to get involved with Papp technology. In any event, Jim Sabori got involved in the early 1980s and so did his brother Jake Sabori. Jim Sabori had gotten so excited about this Papp motor that he convinced his wife, Marla, to see it for herself. They traveled by train from California to see Papp's "Dream Machine" in Daytona Beach, Florida.

Jim and Marla Sabori, I believe, sold their house so that they could invest money in Papp International. Papp at this time in the mid-1980s had his motor running again, and it was demonstrated to many people, such as potential investors, representatives of the U.S. government, and reportedly people higher up in the nuclear fusion program, etc. Remember, by this time Papp had his U.S. patents issued. Of course, if you consider Papp's U.S. patent #4,428,139, all classical physicists and scientists will say that Papp had to be crazy! Such a motor principle simply cannot work according to conventional physics; it makes no sense to claim that you can perform nuclear reactions in a closed cycle engine that resembles a gasoline engine—and with noble gases, no less! There is not even provision for an exhaust or the removal of heat by a radiator! It does not agree with the principles of physics as we know them. So it was natural for Feynman to think that Papp's engine was a hoax designed to milk naive investors.

Even having seen the motor demonstrated by Papp, many scientists who saw it did not "believe it," no matter what. Of course, many non-scientist investors got hooked by the opportunity to make big money, due to what they saw demonstrated by Papp in his garage in Daytona Beach and elsewhere. Then in late 1988 to early 1989, Papp was diagnosed with colon cancer, but he decided against any operation or treatment. He died in mid-April 1989.

Even before Papp's death, Oklahoma dentist Dr. Gale Gibson and friends had entered the saga. Gibson had become enthusiastic about Papp's technology and had convinced the owners of the company to move Papp International to Oklahoma City when Papp was still alive. The engine, which had been in Papp's garage in Florida, was moved to Oklahoma, where a Papp International Laboratory was established. One of the operators and investors was a Kenneth Dollar—an amazing name, given the circumstances! I believe he is still alive, but I have not found or spoken with him.

Papp was unhappy about the engine being in Oklahoma, so he decided to get it back to Daytona Beach. Jake Sabori brought the engine back by truck, I assume at the end of 1988. Jim Sabori has claimed to me that he invested about $450,000—and for that he convinced Josef Papp to get a 49% share in Papp International. Bob Sparrow says that he owned a large percentage of Papp International and so did Dr. Gibson. I have seen court papers from 1994, where the courts in Nebraska confirmed that Jim Sabori had owned 49% of Papp International when Papp died. The story goes that Papp sold "more than 100%" of Papp International, but apparently the others could not legally prove their ownership.

After Papp died in April 1989 the U.S. Internal Revenue Service (IRS) got involved. Papp International had received $10 to $15 million over twenty years, but had never paid corporate taxes. Therefore all the Papp assets were put in a bonded warehouse, and the Papp estate was ultimately sold. There was no money for Papp's wife Helen. Jake Sabori had lived with Papp for a number of years in Daytona Beach— first in the "mansion" with Papp's family, but later in an apartment. Jake Sabori had become a good friend to Papp, and Papp seemed to trust him. But in truth Papp probably trusted no one.

It is claimed that just before his death in April 1989, Papp opened up the working engine and let the gas out of its cylinders, so the engine could not work anymore. Papp, it is claimed, told no one how to make the gas. It is believed that the information in the patent of 1984 is purposely misleading. This, of course, would have made that patent invalid—if that could have been proven, but the patent has expired anyway. It is also claimed that there were no written documents left by Papp and/or drawings and research notes, etc. In 1994, Helen Papp stated under oath in court that Papp did not leave any written materials and that the four remaining engines, the noble gas preparation "lab," and other materials ended up in the bonded warehouse sealed by the IRS. What was left of Papp International was now in Oklahoma City and Jake Sabori moved back to San Jose, California.

Since Jim Sabori claimed that he was a 49% owner of Papp International, I believe he moved to Oklahoma for a time. Since Papp International had no engines and no written information, a two-piston crankshaft engine was built in Oklahoma which was not identical to the Papp engine. This Oklahoma engine has a lot of history to it; it has not worked to this date as far as I know. It was later brought to Lincoln, Nebraska, where an engineer who claimed he knew the secret to the Papp gas formula resided. It is reported that this engineer was later "mysteriously killed." Jim Sabori has said that he arrived just in time to load the Oklahoma-built motor on a truck, and he brought it to Los Angeles, perhaps in 1992.

Jim and Jake Sabori had formed a company in San Jose parallel to Papp International in Oklahoma City. First in San Jose and later in a farmer's barn in Bakersfield, California,

New Energy Times Archive

Jim Sabori and Jake Sabori—and two new people, Dick Minh and Todd Tieu, started experimenting with a single-piston engine having the Papp engine's basic features. This single piston engine had a plastic see-through cylinder with a starter motor drive to operate the piston. They mixed noble gases and were successful in producing explosions in the cylinder chamber filled with the inert gas mixture. They experimented for three years without getting the desired results and the group of four then broke up. One enterprise is led by Jim Sabori. The other—let me call it "JDT"—is the trio of Jake Sabori, Dick Minh, and Todd Tieu (JDT). The JDT group stayed in San Jose and is still there. Jim Sabori, with a friend Willis Brougden, went to Los Angeles, bringing to the company Larry Bonnell, the owner of Mobile Air, a modest motor vehicle repair and refurbishing enterprise.

They raised money again, it is said, through a female relative to the Dreyfus Investment Fund, who had connections to Dreyfus Investment Fund, Japan. Larry Bonnell claims that he has invested in this enterprise at least $650,000—and a large amount was brought in by the Dreyfus Fund. Larry Bonnell rented a private house with an adjacent warehouse for living and laboratory facilities. Jim Sabori stayed in Larry Bonnell's rented home in Los Angeles, but kept his primary home in San Jose with his wife Marla. He commuted by air and/or car to Los Angeles for years.

I should mention that before the split-up of the group of four in Bakersfield, a well-known, respected instrumentation engineer, Walter Rosenthal of Santa Maria (near Santa Barbara), got involved. With Walter Rosenthal and friend Nancy Batchelder, they recorded VHS video which allegedly shows explosions of noble gas mixtures in a transparent cylinder, which produces visible piston action. Nancy Batchelder is a freelance professional videographer in Los Angeles. Several years ago, in the course of Eugene Mallove's parallel investigations of the Papp matter, he received a copy of this tape. Dr. Mallove has shown me this video. It is impressive.

When the group in Bakersfield split in 1992, Walter Rosenthal and Nancy Batchelder joined Jim Sabori's group in Los Angeles and so did a lawyer Jim Flate and investment brokers Fink and Dorsett. This group in Los Angeles stayed together until 1999. They raised and spent about $2 million, but apparently did not get results beyond what they had demonstrated in the "barn" in Bakersfield in 1992. Jake Sabori's group, JDT, established a laboratory in San Jose again under the name of Infinity Energy. [Editor's Note: This company bears no relation whatsoever to our magazine, *Infinite Energy*—the latter being a copyrighted magazine name.—*EFM*] From what I know now, the JDT group did not get further than the one in Los Angeles in finding the right noble gas mixture and producing a working engine.

On December 13, 1999, Walter Rosenthal called me. I had met Rosenthal through the Internet in July 1999 on other matters. This was before I had ever heard anything about the Papp engine or Papp. Walter said: "Heinz, you might want to call Jim Sabori. He has an interesting story about an engine technology and you may be able to help." So I called Jim Sabori and he visited me on December 14. He told me in detail the whole Papp story, his claim to know all about it, and his need for money to go forward. So on December 14, 1999, I began my thorough investigation and my peripheral involvement with the Papp saga in its latest stages. After hundreds of phone calls and hundreds of e-mail exchanges, by February 9, 2000 I had gathered a book full of information about Papp and his engine.

Among other things, the Papp engine that had been working in Florida for a number of years came to the forefront. I found out that Bob Rohner had this specific engine. So, I made arrangements to visit Bob Rohner in Liberty, Iowa on January 19, 2000. Jim Sabori wanted this engine and so did Bob Sparrow in Salt Lake City—as did Willis Brougden/Larry Bonnell in Los Angeles. At 6:00 a.m., just before I had to leave for the San Francisco airport for my trip to Iowa, Bob Rohner called and said, "Guess what? I sold the Papp engine last night for $100,000—in cash and the party took the engine." The engine was sold under a specific condition that Bob Rohner could not tell anyone who received it!

At the same time, Bob Sparrow had a standing offer of $50,000 for the original Papp engine, but he evidently didn't bring payment in time. Bob Sparrow was very upset and called me, because he assumed that I had gotten the engine. Two weeks later I found out that the engine had been bought by Larry Bonnell and his colleague Willis Brougden. At the end of January I made arrangements to meet the group in Los Angeles: Larry Bonnell, lawyer Flate, investment brokers Dorsett and Willis Brougden. This was the last information I needed to make a decision either to go further with Jim Sabori or to call it quits.

In a five-hour discussion at Larry Bonnell's shop and over lunch, I found out that this group was completely out of synch with Jim Sabori's plans. I saw the Oklahoma Papp engine, as well as two single-piston see-through test systems and two gas-preparation labs. One gas lab had components connected with copper tubing. The other one was purportedly Papp's original gas-preparation lab.

I should mention that before 1994 a break-in occurred at the government bonded warehouse and items were stolen. One item which was stolen was the gas-preparation lab. This gas-preparation was reportedly brought to Brigham Young University in Utah and later was brought to Los Angeles. Claims on Joseph Papp's estate and Papp International, recall, were settled in 1994. The property stored in the warehouse in Daytona Beach Florida was auctioned off for a mere $10,000. I understand that dentist Dr. Gale Gibson received three engines and the rights to the Papp patents, one of which at the time still had a seven-year life, that would expire in 2001. The 1984 patent has now, of course, expired.

In early February 2000 I decided to call it quits with Jim Sabori. Until this time I had heard very little about Jake Sabori. Dr. Gibson had told me: "Heinz, it is not Jim Sabori, it is Jake Sabori and Todd Tieu who are involved with the Papp engine work." I was able to contact Jake Sabori on February 9. I chatted for almost two hours with Jake and with Todd Tieu, who later joined the conference call. I shared with Jake and Todd my several month investigation the way I knew it from Jim Sabori and his associates. Both Jake and Todd told me a different story and asked me to visit their lab that same night. It turned out to be a great and very positive surprise for me, because it seemed at the time that JDT had a large and very impressive laboratory in southern San Jose. What Jake and Todd showed me the night of February 9 gave me a very different picture about Papp technology than what I had known earlier.

After a two-hour discussion Jake Sabori asked me what it would be worth for me to get involved. I was told that if I

New Energy Times Archive

could bring in $100,000—in three weeks—then I would be "in." I had no liquid $100,000 and doubted that I could invest family money anyway. So I needed third-party money. I was really excited about what I had found, so I called a top researcher from a very reputable testing corporation, who happens also to be a prominent laboratory investigator in the "cold fusion" field (he wishes to remain anonymous, for now). Let us call him, for now, "Dr. Carl X."

I said: "Carl, you have to see what I saw last night! Do you have time to visit the JDT facility?" Carl agreed, so we visited Jake and Todd and Carl was introduced to Papp's technology. At the end of the visit Carl said: "If this works, then I'd be happy to participate in a tiny fraction of the enterprise—but it is the science that interests me the most." Since May 2000, Dr. X and another Ph.D. colleague have been unpaid consultant scientists for JDT. They later verified significant energy output production in the JDT experiments—energy far beyond what can be explained by conventional electrical or chemical effects from any inputs.

After February 9, 2000, I was very active in my effort to find an investor who would be willing to put into JDT's enterprise $100,000. Eventually I was put in touch with a successful venture capitalist and high-technology industry manager, who in fact did invest in JDT—in part on the basis of Dr. Carl X's report. Let us call this venture capitalist, who also wishes anonymity, "Mr. Z." Eventually, Mr. Z put a low seven-figure investment into the venture with a closing of the deal in early May 2000. We had agreed that I would become a salaried Senior Advisor to the newly-formed company (which did not really happen) and a stockholder. The company expected to have a Papp engine running within a year, but even after three years, no Papp engine has run there, though highly successful explosive detonations in noble gases—at healthy over-unity energy balance—have been carried out.

For various reasons, I decided to leave this effort in September 2002, but I remain a legal stockholder. In December 2002, I formed Clean Energy, Inc., a Delaware corporation, and I filed two patent applications for advanced engine concepts based on Joseph Papp's technology and advanced internal combustion engine (ICE) technology.

This is quite a story—even by Hollywood standards! There is no doubt in my mind that Papp had working engines. In my opinion, these were not fakes. There are more than thirty living witnesses who can verify in many different ways that the Papp engine technology worked. Therefore, I believe we will get it working again soon—it could even be before the end of 2003, if we are very, very lucky! But let us hope that Papp's engine, in whatever form, can be brought to the world once again—this time with great commercial success.

To those who may doubt the reality of the technology behind this amazing story—I don't blame them. It's too much—it takes time and effort to get to the bottom of it, as I did! Many of the individuals who invested in Papp were non-scientists—they were farmers or others with common occupations, and in some cases they were opportunists with a lot of greed. Joseph Papp did not trust anybody, but he took money from these non-scientists. Papp died without telling anybody how his engine really worked, and he himself did not really understand it. However he developed it (or possibly copied it from someone else back in Hungary!), many of the non-scientists witnessed that Papp's engine really worked.

Papp's 1984 patent apparently does not give the answer either. After Joseph Papp died, many non-scientist groups have tried to find the secret of Papp's "Dream Machine." Perhaps as much as $30 million has been invested over thirty years without duplicating what Papp did. All who invested imagined a Golden Goose laying Golden Eggs. They all believed that they would become very rich overnight. Certainly it made more sense to invest in Papp's technology than in windmills. Windmills for power generation are very expensive to build and operate, and they are very inefficient. Papp-like power generators, if they can be built, will, indeed, be like a Golden Goose laying Golden Eggs:

1. A single 200 kW Papp engine coupled to an electric generator might be built to operate for 100,000 hours—ten years of continuous operation (a mean time before failure MTBF of ten years) delivering substantial electrical power.

2. Such a single Papp engine-generator could produce a revenue stream at today's electric rates of about $1.5 million per decade.

3. A single Papp engine-generator could be built in mass production at a cost per unit of less than $1,000.

4. The Papp engine-generator could provide clean, zero pollution energy, at a total fuel cost of less than $100—for ten years—and it would be practically maintenance free.

5. Fifty million Papp engine-generators at 200 kilowatts/unit could produce 10 trillion kilowatts.

6. There are about 500 million automobiles on the road each day worldwide. All of these cars could be equipped with a 100 to 200 kilowatt Papp engine in a ten to fifteen year timeframe.

As far as I am aware, there is nothing on the world's drawing boards that can compete with the Joseph Papp technology. Considering that multi-billion dollars per year are spent to secure the world energy demand for the future, it would be wise to spend a million or a even a few million dollars to find out—once and for all—whether Joseph Papp's clean and cheap energy conversion technology can be duplicated! It is too bad that the demonstration with Professor Feynman present ended in disaster. It is equally sad that the classical science community is not interested in what Papp had achieved, because it does not fit into physics as we know it. On the other hand, most scientists agree that plasma physics will have plenty of surprises for us in the future. Scientists also agree that they do not understand all the secrets of light, magnetism, and other mysteries of basic physics on and on. Papp technology is plasma science. I will not be surprised if the solution to making it work for us turns out to be surprisingly simple.

About the Author

Heinz Klostermann has had over forty years of professional experience in medical electronic imaging systems, as well as with X-ray tube technology, electronics, and high vacuum systems. In the course of his career he has been involved with general management, marketing, sales, customer relations, and product planning and development in the high technology medical products field.

*Clean Energy, Inc., Palo Alto, CA 94306;
Phone: 650-571-6150; E-mail: ahk2@rcn.com

New Energy Times Archive

"Lightning Harnessed":

The Internal Plasma Expansion/Contraction Engine (IPECE)

Heinz Klostermann

The thirty-five-year-old Joseph Papp technology, properly reconstituted, could solve the world's energy problems. The world science community should examine the facts of the Papp engine history as I and others have described them, then join the challenge to re-discover the methods that allowed Joseph Papp's plasma engine technology to work either with noble gas mixtures—or possibly even with air alone!

In such technology:

- The gaseous fuel is injected into the cylinders when the engine is manufactured; under the right conditions a single gas charge would last about six months.
- No air cooling would be necessary; the Papp engine plasma process did not generate significant heat!
- A Papp-derived engine could make a car run 60 miles per hour on the freeway—with an engine estimated to be 50 to 75 hp.
- The new engine technology requires no radically new infrastructure—just a new gaseous fuel provision system. Existing fossil and nuclear fuel infrastructures could be eliminated over a ten to twenty year period.
- Imagine this Airline "Dream Trip":
  - — Fly eighty times around the world with a fully loaded 747 "Electro-Prop," powered by Papp-derived engines.
  - — Stop at many key places around the world.
  - — There are no hazardous combustible fuels aboard the aircraft and there is increased cargo capacity without the fuel weight penalty.
  - — There will be no re-fueling during the six months of travel.

My proposal for an "internal plasma expansion/contraction engine" (IPECE) would utilize the kinetic to mechanical and/or electric energy conversion from the inert gas mixture, such as Joseph Papp used in his engines, *e.g.* as described in his U.S. Patent #4,428,193. Papp claimed that he used an inert gas mixture, which after extensive treatment could become highly reactive when triggered in an enclosed chamber—going from a "ground state" to an "ionized/plasma state" and back to the ground state. This cycling from the ground to the excited and back to the ground state could be repeated at frequencies of more than 60 cycles/second. The reactive gas mixture is ideal to operate an IPECE without needing an exhaust and an injection of a new gas mixture/cycle as required for any conventional ICE (internal combustion engine).

An engine would be loaded with one charge of gas per internal expansion/contraction chamber at the time of manufacture of the engine. It would then run for 8,000 or more hours (about a year) on this load of gas. To avoid failure of operation of an engine with this unique principle, the internal reaction chamber would have to be leak-proof for the gas injected into the chamber(s). Joseph Papp knew this, because his design teaches the use of metal bellows between the cylinder and the piston (see U.S. Patent #3,670,494). But Papp did not use this sealing feature in his experiments, because in his day there were no metal bellows available which would allow cycling at rates of up to 60 Hz for periods of years. We know that Joseph Papp operated and demonstrated his engines, which had no bellows and therefore had an open-cylinder design using Teflon V-rings for sealing between the cylinder and the piston.

Associates of Joseph Papp, such as Bob Rohner of Rohner Engineering, of West Liberty, Iowa, who built Papp's engines, believe that Joseph Papp used an inert gas mixture in his working engines, which had no steel-bellow seals. It is also claimed by witnesses that Joseph Papp opened the two cylinders of his demonstration engine and let the gas out just a short time before he died. It is also said that there was no gas supply left to refuel the engine and that the gas treatment laboratory was not working at the time of Papp's death.

A reliable solution to this major gas leak problem in the Papp design could be overcome with a "free piston generator" design, as shown in Figure 1, which has patents pending by me. This IECE-MG has an oscillating motor-generator with the piston-alternator floating on an air-bearing structure in a cylinder. The stators of the linear motor-generator are located outside the cylinder. At each end of the cylinder is a volume changeable gas expansion/contraction chamber with electrodes for initiating the pulsed plasma expansion. Each end plate has a gas loading port using a one way ball

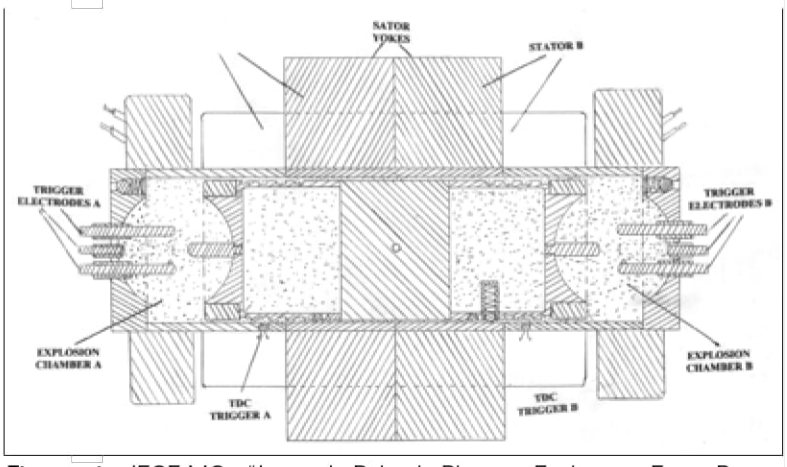

Figure 1. IECE-MG "Internal Pulsed Plasma Explosion Free Piston Motor/Generator" (cross-sectional diagram).

New Energy Times Archive

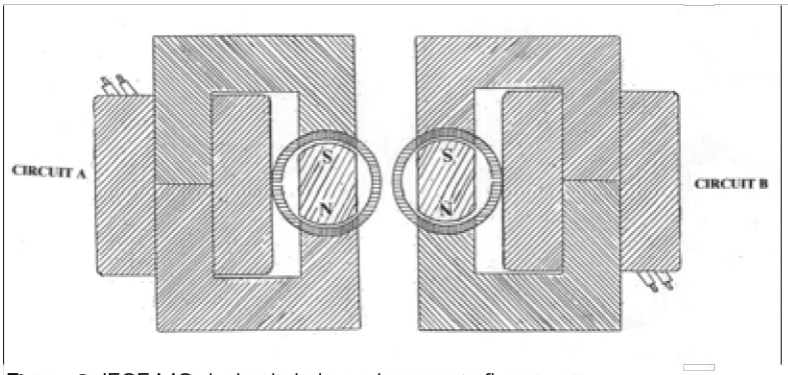

Figure 2. IECE-MG dual split balanced magnetic flux circuits.

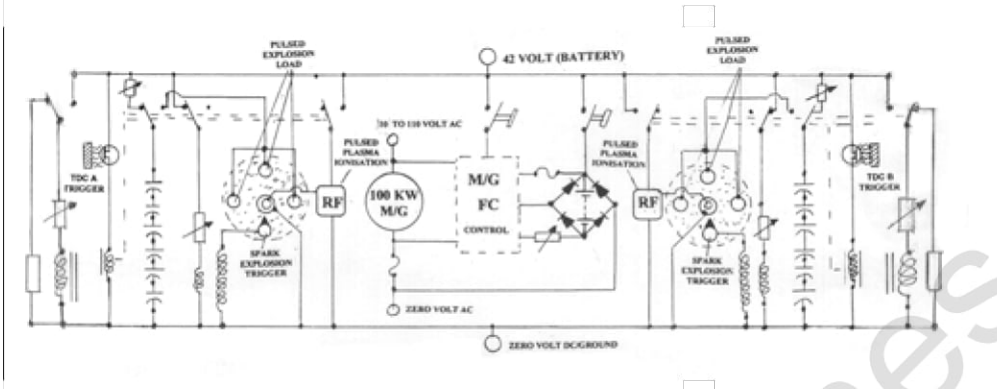

Figure 3. IECE-MG principle circuit diagram.

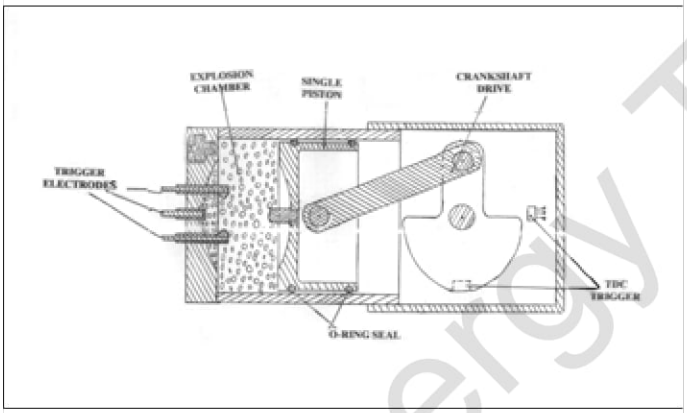

Figure 4. IECE single piston two-stroke crankshaft engine cross-sectional diagram.

valve. When using an inert gas mixture, the ball valve will be hermetically sealed along with the whole cylinder envelope. The cylinder wall has two laminated silicon steel inserts that are hermetically sealed into the housing wall.

The alternator has a 50 MGO NEFEB (neodymium iron boron) permanent magnet. The magnetic flux circuit of the oscillating linear motor generator is shown in Figure 2. It is called a balanced split-flux circuit, which provides maximum flux efficiency. Figure 3 shows a diagram of the IECE-MG operating principle. The motor function is used to start the piston oscillating and thus air is pulled into the expansion chambers A and B through the two ball valves and is sealed. From the BDC A to the TDC A, the compression stroke, the air in the chamber A is compressed, heated, ionized, and becomes highly conductive. At TDC A Magnet Hall Switch sensor A turns on relay A. Thus relay A applies a high voltage spark, RF (Radio Frequency), and a high current discharge through the gas from a capacitor storage and an ionized plasma expansion is initiated moving the piston from the A-TDC to the A-BDC.

Since the two chambers are out of phase by 180 degrees, the compression and expansion is out of phase by the same 180 degrees, thus providing the oscillating movement of the piston alternator. The generator power output depends on the volume, the volume change, the frequency, and the mean effective pressure in the chamber, the magnetic field intensity, and number of turns of current carrying conductors.

The proposed IPECE-MG might have these specifications:

- Cylinder: 304 non-ferromagnetic stainless steel, aluminum or ceramic
- Cylinder end-wall: 416 ferromagnetic stainless steel
- Cylinder inserts: 0.005-inch laminated Si-Ferro magnetic steel (3 inches x 3 inches)
- Cylinder chamber ID: 4 inches
- Cylinder length: ~12 inches
- Piston stroke length: 3 inches
- Piston support: linear gas (air or inert gas) bearing
- M/G alternator: NEFEB 50 MGO, tiled (2 inches radius x 3 inches wide x 3 inches long)
- Sensor: Magnetic, hall switch
- Battery: 42 volt DC
- Operating fuel: Ambient air, or inert gas mixture
- Stator yokes: 0.005 inch Si-Ferro-magnetic lamination
- Stator coils: Copper wire
- Estimated weight: ~100 lb.
- Motor/Generator Power: 200 kw at 220 V 50/60 Hz

Figure 4 shows the principle of a single cylinder two-stroke crankshaft engine, which is not hermetically sealed. Such an engine can be extended to multiple cylinders (2, 4, 5, 6, 8, 16 cylinders). These engines can be connected to either a mechanical drive as used in most transportation vehicles or can be connected to a rotary motor/generator as used in emergency electric power supplies.

To discuss the purchase of a two-cylinder Papp test engine contact:

Rohner Engineering
West Liberty, Iowa
Phone: 319-627-2510
Fax: 319-627-2040
E-mail: rohnereng@aol.com

Watch for ICCF10 coverage in Issue 52.

New Energy Times Archive

Contrast and Comparison Between the Papp Engine and the PAGD™/XS NRG™ Technologies

P.N. Correa and A.N. Correa

(The following is an edited extract of a report the authors were asked to make for evaluation of a technology which copied Papp's but gave him no credit whatsoever.)

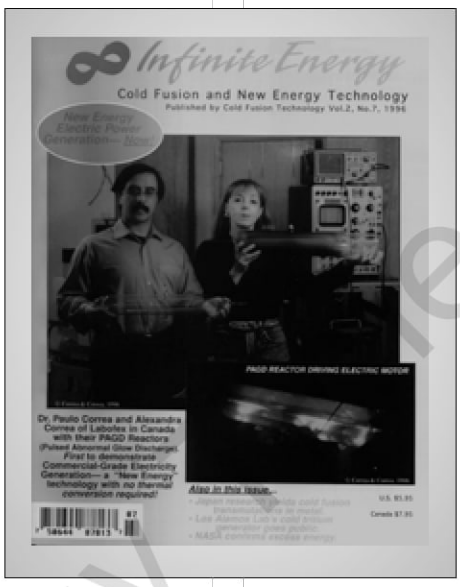

A comparison between the Papp engine[1] and the PAGD/XS NRG™ system[2-5] can be a very instructive exercise not just in the comparative analysis of new power-generation technologies, but also in the evaluation of electric plasma-based devices that deploy anomalous cathode reaction forces.[6,7]

Both the XS NRG™ energy converter and the Papp engine employ emission plasmas and inert gases to harness, in the former, the energy of the discharge and, in the latter, the motive power. Both systems operate with hermetically closed vessels—the compression chambers of the reciprocating cylinders in the Papp engine, and the PAGD pulse generators in the XS NRG™ energy converter. However, whereas the Papp engine must employ a very high pressure for the mixture of inert gases (lines 60-65 of p. 8, Reference 1), in the PAGD system the inert gas is merely residual, as it plays its role in the initiation of the discharge and in the electrodynamic force transfer.[8]

Both systems employ a sudden (and catastrophic) electric discharge. Papp followed the model of the internal combustion (IC) engine, with the high-pressure spark igniting the inert gas fuel. In the PAGD, the "spark" consists of a diachronic cluster of auto-electronic emission sites that fail to sustain a vacuum-arc. The electric discharge is not accessory, as it is in the Papp technology; rather, it is constitutive of the technology by its physical characteristics, including the autogenous pulsation. It is, in fact, the method whereby the "vacuum-state" is tapped. The PAGD discharge is a low field auto-electronic emission that directly generates the electron plasma from a cathode that can be treated as fuel.[9] This has a deep parallel with the Papp engine, where the explosion is, in our view, driven by the formation of an electron plasma emitted from the inert gas mixture—which must thus be treated as the fuel proper (see below). The basis for the presence of anomalous cathode reaction forces in the Papp combustion, stems, in our view, entirely from the (quasi-solid) conditions that permit autoelectronic emission from inert gases.

Magnetic excitation of the combustion plasma is required in the Papp engine, in order to optimize the compression structure of the fuel gas mixture at ignition. Magnetic induction is not necessary in the autogenous PAGD regime—though it can be employed to modulate firing rates. Electrostatic means can equally be used for the same task, but if the XS NRG™ system is properly tuned, neither is necessary for fixed rate operation.

Like the IC engine, the Papp engine requires high-voltage ignition coils to ionize and ignite inert gases at atmospheric or supra-atmospheric pressures. Papp himself described how the discharge at these voltages produces X-rays, and how, "at the focal point of particle collision" inside a cylinder, alpha, beta, and gamma radiation will originate from the thermonuclear fusion process involving the helium core.

In some versions of the Papp engine that have been witnessed by the authors, high-power hardened X-ray production could be readily observed in transparent cylinders. This reminded us—but in a massive way—of the X-ray production that we observed in high-vacuum tubes when we were learning how to isolate the PAGD regime and sustain it at lower breakdown voltages in the absence of X-ray production. Indeed, this is one of the main differences between the PAGD/XS NRG™ system and the Papp engine: that the PAGD micro-explosions occur at low voltage and generate no significant ionizing radiation.

In the Papp engine there are also significant so-called radio frequencies associated with the high frequency oscillator circuits, the ignition coils, the ionization step, and the plasma ignition proper, that must be shielded against. This, in our view, does not present a health hazard—and a similar, though broadband, RF signature can be obtained from an operating PAGD reactor.

The transfer of the explosive force to assist the recompression of the gas and the transfer of output electric energy to re-ignite the mixture (lines 53-53, p. 10 of Reference 1) are critical steps in the Papp engine protocol, and are carried

New Energy Times Archive

out, respectively, by the reciprocating cylinders and the inductive couplings and internal wiring of the firing circuitry. Papp employed one or two very large amperage 24V batteries (line 14, p. 7, Reference 1) as the electrical drive to power the engine's 40kV ignition coils (lines 41-43, p. 7 Reference 1). Much debate has occurred on the sidelines as to whether or not the battery was needed for the continued operation of the system. To us, it is apparent that it was required and that Papp never demonstrated either that his engine could do away with it, or that it was capable of being recharged through operation of the system. (Feynman argued otherwise, that Papp claimed a perpetual motion machine; he wrote this to justify his actions, following a lawsuit filed by Papp and lost by Feynman and Caltech, and caused by Feynman's failure—during a demonstration of the engine—to hand over the power line switch to Papp, which resulted in a major engine explosion, serious injuries to two participants, and the death of a third.) In fact, the Papp engine requires a continuous input of power to make up for the loss in each subsequent ignition. Furthermore, Papp emphasizes that the 24 volts present across the main electrodes "is always present during operation" (line 54, p. 10, Reference 1). What Papp indicates (lines 67-68, p. 11) is that, once initial ignition has taken place in both cylinders, subsequent ignition will no longer need the starter motor; but the need remains for: 1) the modulating oscillators (Papp utilizes a high-frequency source for supplying varying voltage to the electrodes, and a pulse timer and distributor that provides three or more pulses from the ignition coil to each of the cylinders at any one time), 2) the high voltage source, and 3) the low voltage/high-current source—even if the latter is only applied sporadically (the capacitor banks hold substantial portions of the power input over time).

The XS NRG™ converter also employs a drive pack (of much greater voltage and lower current) as source for the triggering of plasma pulses, but the system output greatly exceeds the spent electric input, permitting demonstration of the recharging of the drive pack via interchange with the battery system (the charge pack) placed to capture the system output.[10]

The reaction vessel is, in both systems, the source of radiant heat. Papp reported that the key function of his engine was the "minute fusion reaction" (line 55, p. 11, Reference 1) in the highly ionized helium layer, at the very core of the plasma formed, and reported a temperature of approximately 100,000,000°F. Papp emphasized that the plasma must not last longer than 10^{-6} seconds, otherwise the intense heat will damage the cylinder walls. Papp also mentioned that the cylinders will heat up with time of operation. We very much doubt that the Papp engine reaches the quoted temperatures, even at its core. Be that as it may, because of the high pressure gas, heat transmission to the engine walls constitutes a real engineering problem of plasma confinement with definite timing constraints. In the PAGD electron plasma, temperatures of >48,000°C are also reached (modal photon radiation at 300 nm),[8] but the high-vacuum and high-volume vessel prevents substantial heat transfer to the vacuum envelope. Yet, there is sufficient residual heat to also be tapped directly and advantageously in the process of electrode cooling.

The Papp art teaches that both the anode and the cathode must be constructed so as to contain specific radionuclides (thorium-232, rubidium-37, phosphorus-15, or strontium-38 and sulfur-16). The technology thus utilizes radioactive compounds. No such need arises in the PAGD technology, though we have had plenty of unsolicited advice on how to duplicate the Moray valve method, which employed certain radioactive compounds to sustain low-level ionization of the gas substrate. With proper tuning of the physical parameters of the discharge, no such coarse methods are needed by a clean XS NRG™ system. The critical parameter lies in taking advantage of the constitutive benefits of the Paschen Law, when the latter is aetherometrically understood.

Replacement of the rare gas canisters in the Papp engine is the equivalent of tube replacement or refurbishing in the PAGD/XS NRG™ system. Each has its ash, radioactive in the former and nonradioactive in the latter. Papp indicates that each cylinder will have to be replaced every 1,000 hours or so, with the helium gas being consumed in the process. Another element to consider is that, while the gases utilized are cheap and readily available, the engine requires very precise gas mixtures and ultra-high purified gas components. The process of mixing, filtering, photon injection, frequency separation, etc. necessary to prepare the gas mixture is both costly and elaborate, and entails a substantial power expenditure. It involves all manners of steps, and is described in great detail by Papp on pages 15-22 of his patent.

R&D problems of a similar nature arise in the case of the XS NRG™ technology—problems having to do with the mirroring of the tube and with the changing work-function. Rare gas is not necessary, and properly evacuated tubes can easily last more than ten years with respect to the residual inert gas content. Innovative solutions were pursued for the more serious problems of mirroring, ion-pump effect, and the emissivity of the metal fuel, and some have borne unexpectedly positive results from simple engineering and design solutions.

Essentially Papp described his invention as being analogous to a hydrogen fusion reactor, except that: 1) it used inert gases, not hydrogen; 2) instead of a high input power required to contain the plasma by strong applied magnetic fields, it used a form of inertial containment of the core helium (layering of the other gases with increasing atomic weight); 3) whereas with hydrogen reactors, the input power is high and the excitation power low, with the Papp engine, the input power is low but the excitation power is high. Papp did not make any claims whatsoever of producing or obtaining energy in excess of breakeven, he did not show any data for such, and simply stated that his engine had overall lower energy requirements than combustion engines and was, accordingly, more efficient. It would be indeed very difficult to estimate all the power inputs to the Papp engine from the patent specifications, given the plurality of sources utilized.

In contrast to the complex requirements of the Papp technology, our overunity technology stands to provide a high-volume power source as a compact system having no moving parts and generating no noise, where efficient motor couplings are made external to the reactor system.[5] It offers a light-weight implementation and has the benefit that the key power unit is a replacement item with a long lifetime and low associated fabrication costs (nothing like the laborious and expensive Papp cylinder cartridges), thus also making it easier to recover R&D investment. Reactor components are constructed of readily available, recyclable material and produce no radioactive or other noxious residues.

New Energy Times Archive

References

1. Papp, J. 1984. "Inert Gas Fuel, Fuel Preparation Apparatus and System for Extracting Useful Work from the Fuel," U.S. Patent #4,428,193.

2. Correa, P. and Correa, A. 1996. "Excess Energy (XS NRG™) Conversion System Utilizing Autogenous Pulsed Abnormal Glow Discharge (PAGD)," *Proc. Int. Symp. on New Energy*, Denver, Colorado, pp. 43-62.

3. Correa, P. and Correa, A. 1994. "Pulse Generator," WIPO, WO94/03918; Canadian Patent #2,141,309, January 4, 2000.

4. Correa, P. and Correa, A. 1996. "Direct Current Energized Pulse Generator Utilizing Autogenous Cyclical Pulsed Abnormal Glow Discharges," U.S. Patent #5,502,354.

5. Correa, P. and Correa, A. 1995. "Electromechanical Transduction of Plasma Pulses," U.S. Patent #5,416,391.

6. Aspden, H. 1969. "The Law of Electrodynamics," *J. Franklin Inst.*, 287, 179.

7. Aspden, H. 1977a. "Electrodynamic Anomalies in Arc Discharge Phenomena," *IEEE Trans. Plasma Sci.*, PS-5, 159.

8. Correa, P. and Correa, A. 2002. "Aether Power from Pulsed Plasmas," Akronos Publishing, ABRI Monograph LS-25.

9. Correa, P. and Correa, A. 1993. "Metallographic and Excess Energy Density Studies of LGEN™ Cathodes Subject to a PAGD Regime in Vacuum," Labofex Scientific Report Series, S1-007. Also published in *Infinite Energy*, 3, 17, 73, and by Akronos Publishing as LS1-07.

10. Correa, P. 1998. "The Autogenous PAGD Technology," in "Usages of Physics and the Inventor's Health," *Infinite Energy*, 4, 23, 33.

Motors Driven by Aether-Captured Power!

DVD of the work of Dr. Paulo and Alexandra Correa
First presented at the 2nd IET Conference in Berlin, June 2002

"From Pulsed Plasma Power to The Aether Motor" (ca. 100 min.)

NEW — Digitally Remastered Version

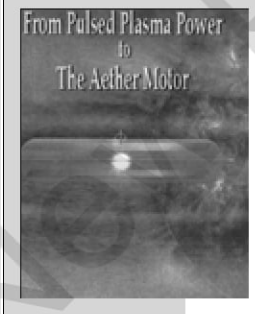

SEE:

- Aether motors driven by ORACs, the human body, Vacor tubes and more, with no input power from conventional sources.
- Patented PAGD™ Plasma Reactors driving spinner motors and flywheels.
- Stirling Engine/HYBORAC testing.
- Introductions by Dr. Eugene Mallove and Dr. Harold Aspden.
- Testimonial letters, and much more...
- New video footage in digitally remastered version.

Please send check or money order for $129.95 + $4.00 shipping ($8 foreign) to:
Aethera, P.O. Box 181, Suncook, NH 03275
www.aethera.org

Your Doctor Says You Could Live to Age 100+ and He's Right!

The new science of Anti-Aging Medicine is the fastest growing clinical medical specialty focusing on "optimum wellness and longevity". The *New England Journal of Medicine* has called it the medicine for the next millennium. Already hundreds of thousands of Americans are benefitting from the age-reversing and rejuvenating technologies offered by our physicians.

Join the battle against aging!

A4M AMERICAN ACADEMY OF ANTI-AGING MEDICINE

A nonprofit scientific foundation

FREE!

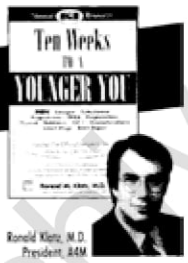

Receive a complimentary copy of *Ten Weeks to a Younger You* when you join A4M. $15.95 value.

Ronald Klatz, M.D.
President, A4M

The American Academy of Anti-Aging Medicine, whose membership includes over 7,000 physicians and scientists from 50 countries, is at the forefront of the biotechnology revolution. Keep up with the latest medical advances in controlling and eliminating the diseases of aging.

Join A4M today and receive:

- Free information
- Physician referrals
- Discounts on books, medications, nutrients, seminars, spas and medical programs

Call 773-528-4333

Log on to our award-winning web site:
www.worldhealth.net
"Among the top 15 medical web sites"
Best of the Web, Luckman Internet Yellow Pages

The Hunt for Zero Point: Inside the Classified World of Antigravity Technology

Nick Cook

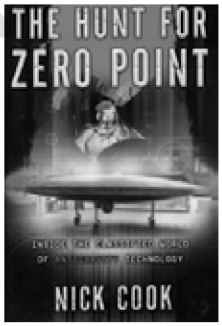

Hardcover, 2001, 291 pp.

Venture into the heart of the classified world of aerospace development to examine the efforts by scientists to control and harness the unlimited power of gravity.

$26.00 North America
$31.00 Foreign

Order from: New Energy Foundation, Inc.
P.O. Box 2816, Concord, NH 03302-2816
Phone: 603-485-4700 Online: www.infinite-energy.com

COLD FUSION TIMES

The Journal of the Scientific Aspects of Loading Isotopic Fuels Into Materials

Published Quarterly

Publisher and Editor, Dr. Mitchell Swartz
Annual Subscription Rate $120/Single Issues $40
Outside U.S. add extra $5.

P.O. Box 81135, Wellesley Hills, MA 02181 USA

New Energy Times Archive

Orgone Charged Photomultiplier Tubes

Thomas Nieborowski

Reprinted with permission from The Journal of Orgonomy, Fall/Winter 2001, Volume 35, Number 2.

Editor's Introduction:
Thomas Nieborowski's paper, which we reprint from an issue of the *Journal of Orgonomy*, is not an example of extremely deep and conclusive investigation of the vacuum medium—from Wilhelm Reich's perspective of the ability of an "orgone accumulator" (ORAC) to concentrate energies that may affect sensors such as thermometers and electroscopes. However, it is noteworthy that Mr. Nieborowski, when he was a physics student in 1978, took the initiative to conduct a clever investigation of the possible ORAC-charging of vacuum tubes—in this case of off-the-shelf RCA photomultiplier tubes. Reich had observed blue glows from ORAC-charged glass VACOR tubes. But as Nieborowski points out, photomultiplier tubes are quite different from tubes with no multi-stages of high voltage acceleration and large parallel plates of low-work-function metal. He is careful to point out some of the possible shortcomings of his methodology, as well as additional experiments that may be performed. His preliminary investigation, if not artifact-plagued, suggests a real effect by ORACs on the vacuum medium within the enclosed tubes. His professors could not find a flaw in his apparatus, he says.

The most important message of this article is that it is possible with rather simple apparatus and some care to conduct significant experiments in fundamental physics. We encourage *Infinite Energy* readers to examine—and perhaps to try to reproduce—Nieborowski's work. For a much more extensive catalog of experiments—and detailed theoretical explanations—that deal with the mass-free aether energy that underlies Reich's and Tesla's work, one should consult the pioneering science of the Correas, which can be found at www.aetherometry.com. —Eugene Mallove

The History of Orgone Charged Vacuum Tubes
Reich was able to charge glass tubes evacuated to 0.5 microns in the orgone energy accumulator to a point that some of them produced a faint glow, visible to the unaided eye.[1] When a voltage of 100 to 1,000 volts was applied to a pair of aluminum electrodes imbedded in the vacuum tube, the tube would emit blue and white light. A photograph of a luminating, orgone charged VACOR tube can be found in *Cosmic Superimposition*.[2] He also saw flashes of light between the electrodes and reported that the deflection of an electroscope collapsed slightly when a flash occurred.

Background on Photomultiplier Tubes
A photomultiplier tube (PMT) exploits the photoelectric effect to detect very low levels of light. [The photoelectric effect was discovered in 1887 by Hertz, who found that UV light facilitates the sparking between electrodes connected to a high voltage. In 1902 Lenard found that the energy of electrons ejected by certain electrodes did not depend on the intensity of the irradiating light, but on its frequency. The classical prediction of the outcome of this experiment fails. In 1905 Einstein applied and extended Planck's quantum hypotheses for a theory that well describes the experimental outcome. According to Einstein, light occurs in localized packets of energy which if absorbed can "knock" an electron out of a metallic surface.] The nearly evacuated tube contains a photocathode, several dynodes, and an anode. The photocathode usually consists of an alkali metal with a low "work function," *i.e.* it easily emits electrons. If an electron is emitted from the photocathode, it will be accelerated toward the first dynode. Upon impact several electrons will then be emitted and accelerated toward the next dynode. This way an avalanche of electrons is collected at the cathode and can be amplified and measured. Even if completely shielded from visible light, PMTs will produce spurious counts (electrical pulses) due to the following reasons:

- thermionic emission of electrons from the photocathode
- dynode gain variations especially at the first dynode
- positive ions hitting the cathode due to residual gas in the tube (mostly water)
- cosmic rays

Also, counts will increase with temperature and the applied voltage.

The PMT is comparable to Reich's VACOR tube: Both are evacuated tubes to which a voltage is applied and which produce pulses. However the PMT does not contain large parallel plates and Reich did not use electrode metals with a low work function.

It appears that the pressure-voltage combination is critical in determining which physical process—photoelectric effect, orgone energy pulses, or others—occurs in the tube. What Reich observed in tubes at very low pressure and voltage is distinct from a plasma discharge at much higher pressures and voltages.

Experiment
In 1978 while I was a physics student, I had access to RCA PMTs (RCA 7746). After shielding all light from the interior of the tube by wrapping it in aluminum foil and tape, I established a quasi-constant base count that was insensitive to intense external light sources. After obtaining a dark count commensurate with the voltage of the tube and the room temperature, I placed the tube in a small orgone energy accumulator (ORAC) consisting of a metal coffee can wrapped in alternating layers of steel wool and polyethylene sheeting. The top of the can was covered with an upside down metal funnel, cut off to hold the PMT.

Unless noted otherwise, the tube was inserted into the top of the ORAC, immediately powered and pulses were counted continuously starting at time = 0. After counting was ter-

New Energy Times Archive

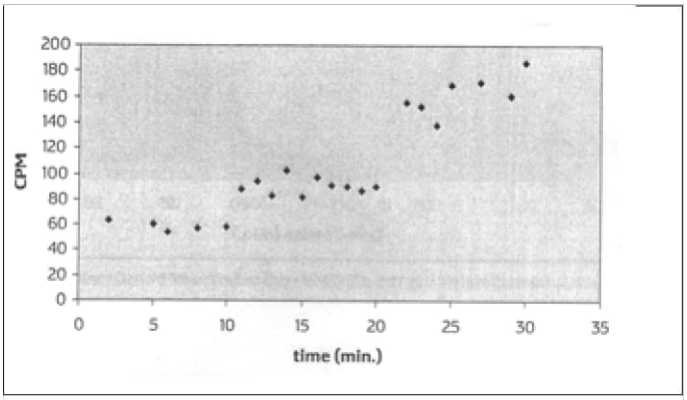

Figure 1. Tube 1, at 1,600 volts, placed in ORAC at time = 11 minutes. Note the jump to a higher plateau at 22 minutes.

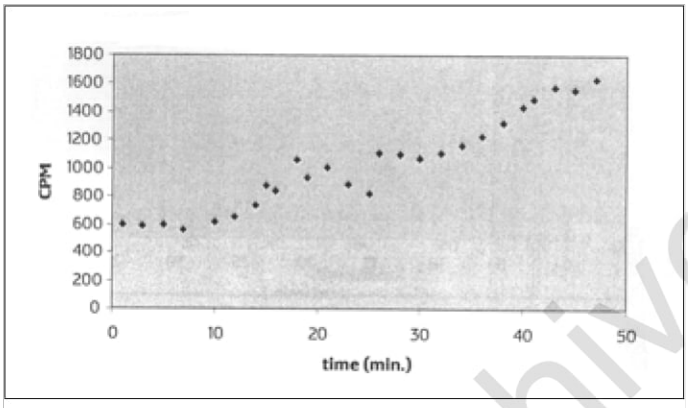

Figure 2. Tube 4, at 1,700 volts, was counted outside the ORAC for 10 minutes at 320 CPM and then left in the ORAC for 20 minutes without voltage. The chart starts when counting resumed at 1,700

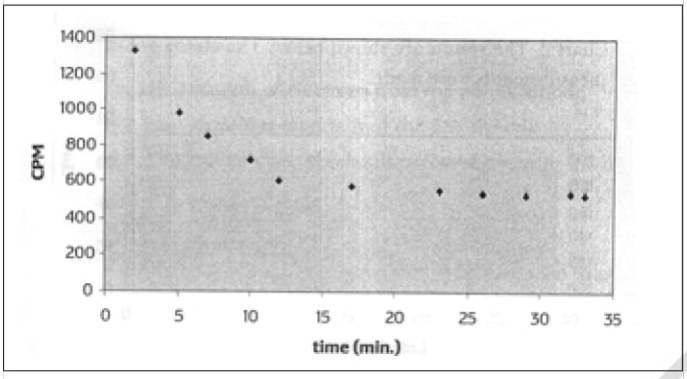

Figure 3. Immediately after the previous run, tube 4 was transferred from the ORAC to a sealed cardboard tube. The chart starts when counting resumed again at 1,700 volts. The counts revert to the level at the beginning of the previous run (Figure 2).

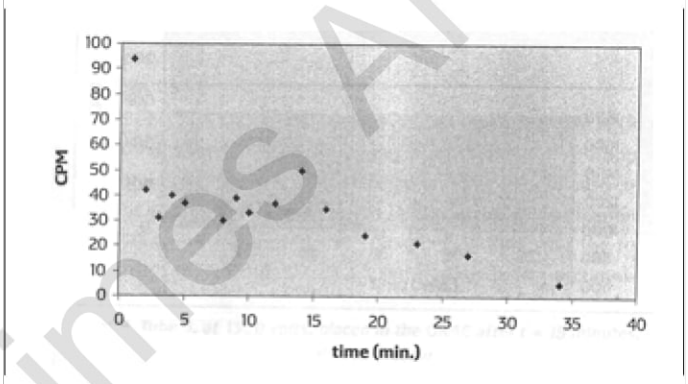

Figure 4. Tube 1, at the very low voltage of 1,450 volts, in the ORAC.

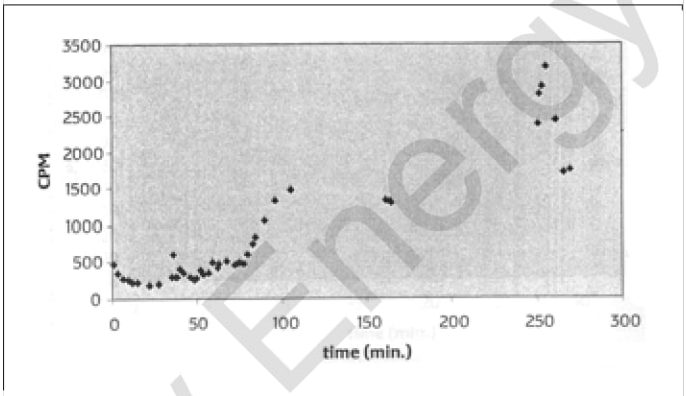

Figure 5. Tube 4, at 1,550 volts, in the ORAC. Counting started at 9:00 a.m. The same tube as in Figure 2, now with lower voltage, eventually has higher counts.

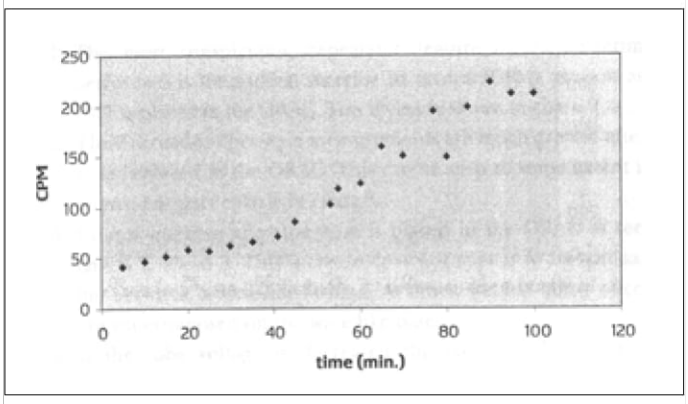

Figure 6. Tube 4, still in the ORAC, with voltage reduced to 1,450 volts. Counting started at 1:40 p.m.

minated, the tube was immediately powered down and removed from the ORAC. Only one ORAC was used and only one tube was in the ORAC at one time.

All tubes were stored outside the ORAC between experiments except for Figure 2. The charts are in the order the measurements were made.

Observations

1. The most conspicuous, repeatable feature of the experiments performed is the sudden increase in counts (CPM) as soon as the PMT is placed in the ORAC. This is clearly shown in Figures 1, 2, and 8.

2. The fluctuations between measurements are much greater after the tube is placed in the ORAC. This can be seen to

New Energy Times Archive

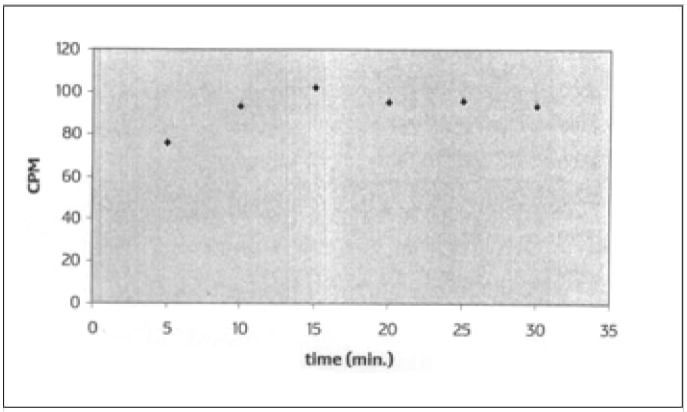

Figure 7. Tube 1 at 1,450 volts.

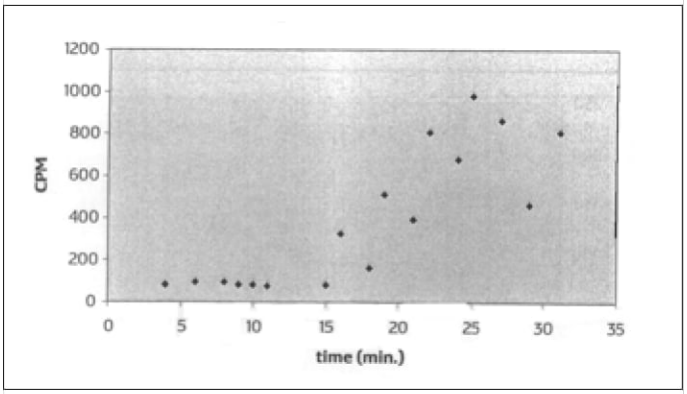

Figure 8. Tube 3, at 1,300 volts, placed in the ORAC after t = 15 minutes. Note the strong fluctuations between measurements after the tube is in the ORAC.

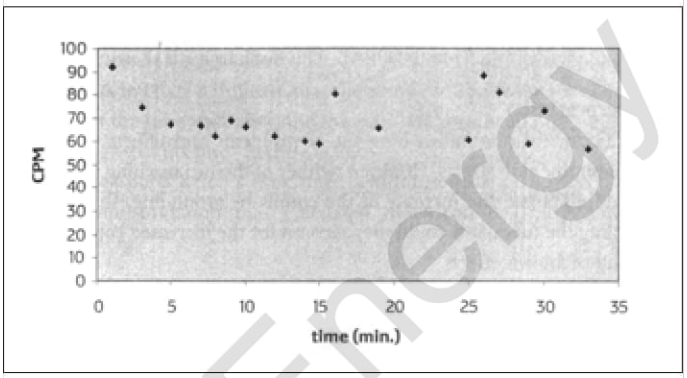

Figure 9. Tube 2 (control), at 1,420 volts, outside the ORAC (and never in an ORAC at any time) remains in the narrow range of 92 to 56 CPM.

some extent in all charts, but particularly in Figure 8.

3. Counts increase after the tube is placed in the ORAC, as seen in Figures 1, 2, and 8. This increase does not appear to be mechanical but occurs in a wave-like fashion. At times, sudden bursts of counts are superimposed on the wave-like base.

4. If the tube voltage is decreased the counts will, as expected, decrease. However, in some cases the counts will continue to increase, at times to levels above those that had occurred with higher voltage. This is shown in Figures 5 and 6.

5. Charging the tube in the ORAC in the absence of any voltage is sufficient to double the counts when voltage is reapplied. This is evident in the experiment documented in Figure 2.

6. The counts will decrease exponentially when a previously charged tube is removed from the ORAC. This discharging is shown in Figure 3.

Interpretation

PMTs are delicate and a long list of problems and effects can cause undesirable side effects. However, neither of the two teaching professors could eliminate the increase in the counts by grounding, shielding, or cooling the tubes, nor could they account for the increased counts as the result of known effects.

The similarity of this experiment and Reich's VACOR tubes suggests that the same physical process, namely lumination of electrically excited orgone energy in a vacuum, may be at work in both experiments. It is not clear whether the continuous lumination or the flashes that Reich observed (or both) is the cause of the excessive counts. Evidently PMTs are sensitive enough to detect lumination during the charging process, at levels that are not visible to the naked eye. PMTs are always used to detect an external light source. In the present setup the sensor and the object under investigation are the same.

A number of other interpretations should not be ruled out. The entire tube-ORAC system was excited by the voltage in the tube except for the experiment in Figure 2 prior to time 0. Alternatively, it would have been possible to always remove the tube from the ORAC prior to taking counts in order to avoid exposing the ORAC to the tube voltage. The PMT might have sensed some other type of pulse. It would be interesting to see if light could be detected when separating the source of the pulses and the sensor. This could be accomplished by placing a second PMT or CCD (charge coupled device) some distance away from the original PMT and the ORAC but coupled to it via a collecting lens. Would there be a correlation of pulse counts of the tubes? It would also have been useful to charge the PMT in the ORAC for some time without voltage, remove the PMT from the ORAC and then measure counts, while always monitoring lumination with an external sensor.

Evidently the tubes were charged in the ORAC. I worked with four tubes and could charge all of them, at will, using different voltages. The counts in Figure 3 indicate that the source of the counts is not the ORAC but the tube itself, because the tube still produced high—albeit decreasing—counts outside the ORAC.

This supports Reich's experiments with luminating vacuum tubes and his interpretation that evacuated tubes can be charged with orgone energy.

Discussion

It is possible to store charges and energy in an electric field by applying a voltage to a pair of parallel metal plates (capacitor). If a dielectric is placed between the plates, the amount of electrical energy that can be stored for a given voltage is greatly multiplied. Water, for example, is a very good dielectric. Notably, if you remove any dielectric between the plates by placing them in a vacuum, one can still store energy in this capacitor. The vacuum therefore behaves as if it were a polarizable medium (*i.e.*, containing positive and negative charges). When Reich increased the voltage at the electrodes of the VACOR tube, the glow, which was strongest near the electrodes, would intensify, expand, and approach each

New Energy Times Archive

other. Orgone energy therefore behaves like a polarizable medium. Presumably, the charged particles that constitute much of our universe originated from the orgone energy ocean, so it should not come as a surprise that orgone energy already has functions related to the polarizable medium. This is not to say that there are two kinds of orgone energy.

The notion that space is not empty after all is gaining some momentum again. According to Vigier:

> In my opinion the most important development to be expected in the near future concerning the foundations of quantum physics is a revival, in modern covariant form, of the ether concept of the founding fathers of the theory of light (Maxwell, Lorentz, Einstein, etc.). This is a crucial question, and it now appears that the vacuum is a real physical medium which presents surprising properties (superfluid, *i.e.* negligible resistance to inertial motions) so that the observed material manifestations correspond to the propagation of different types of phase waves and different types of internal motions within the extended particles themselves. . .[3]

References

1. Reich, W. 1949. "Orgonotic Light Functions," *Orgone Energy Bulletin*, 3, 1.

2. Reich, W. 1951. *Cosmic Superimposition*. Orgone Institute Press, Rangeley, Maine.

3. Vigier, J.P. 1995. "Fundamental Problems of Quantum Physics," *Apeiron*, 2, 4.

About the Author

Mr. Nieborowski has been designing and implementing Java and C++ programs for ten years in the semiconductor equipment industry and as an independent consultant. He maintains a site on quantum mechanics in general, and in particular de Broglie-Bohm-Vigier quantum mechanics, at www.tiac.net/users/fbh/. Mr. Nieborowski is currently building his own echelle spectrograph.

The Free Energy Secrets of Cold Electricity

The video is a technical lecture (September 12, 2000) by Dr. Peter Lindemann. A coherent discussion of the possible connections between free energy claims by inventor Edwin Gray in the 1970s-1980s and the much earlier alleged "free" energy broadcasting ideas of Nikola Tesla. Those who experiment and speculate about energies connected with arc discharges and lightning will find in this material highly creative hypotheses. *Also available in book form.*

170 min.
NTSC or PAL Format
$29.95 North America

Prices include shipping and handling.

New Energy Foundation, Inc.
P.O. Box 2816 • Concord, NH 03302-2816
Website: www.infinite-energy.com
Phone: 603-485-4700 • Fax: 603-485-4710

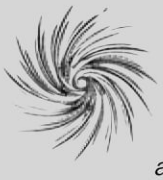

The Planetary Association for Clean Energy, Inc.

A collaborative network of advanced scientific thinking since 1975

• Brown's Gas • advanced therapeutics • consciousness studies • electromagnetic field bioeffects • free energy devices • human rights of scientists • legacy of Nikola Tesla • nuclear and toxic waste decontamination • scalars and the fundamentals of physics

Sample copy of our Newsletter containing book, video, software & CD-ROM list.

The Planetary Association for Clean Energy, Inc.
100 Bronson Avenue, Suite 1001
Ottawa, Ontario K1R 6G8, Canada
(613) 236-6265 Fax: (613) 235-5876
E-mail: paceinc@homestead.com
http://pacenet.homestead.com

The Scientist, the Madman, the Thief, and Their Lightbulb

by Keith Tutt

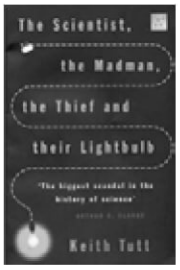

This is the U.S. release of the book originally titled *The Search for Free Energy*. Tutt presents the many new energy/free energy inventors of the past 100 years, from Nikola Tesla, to Stanley Pons and Martin Fleischmann, to Randell Mills and Alexandra and Paulo Correa; the book includes two chapters on the cold fusion field and its researchers.

$15.00 North America
$20.00 Foreign

Order From:
New Energy Foundation, Inc.
P.O. Box 2816 ◆ Concord, NH 03302-2816
Phone: 603-485-4700 ◆ Fax: 603-485-4710
Online: www.infinite-energy.com

Infinite Energy Solicits Your Manuscripts Dealing with:

- **Experimental Results in Cold Fusion and New Energy**
- **Theoretical Ideas**
- **History of Science and Technology**
- **Conventional Energy or Alternative Energy**
- **Book Reviews**

For author instructions:
visit www.infinite-energy.com,
e-mail staff@infinite-energy.com
or phone 603-485-4700

New Energy Times Archive

Long Time Weather Forecasting:

Ladybirds, Magnetic Fields, and Electromagnetic Radiation

Ferenc Wernsdörfer*

Introduction

My hypothesis about Earth's climate is based on two independent observations. However, interesting conclusions can be derived by comparing these observations according to long-term weather trends, *i.e.* climate. Though this is an hypothesis, I am convinced of its truth.

The "Weather Forecast" of the Ladybirds

An educational movie[1] dealt with the perception capabilities of various animals, *e.g.* how a rattlesnake perceives its prey. The end of the film considered the orange ladybird (ladybug beetle). Some research has determined that the ladybird can perceive if the winter will be hard or mild! If winter will be cold, orange ladybirds spend winter in moss or near the bottom of trees, on the ground. If the winter is to be mild, the orange ladybirds spend winter in trunks of trees or in upper branches. From late October, ladybirds do not change their positions on their tree. All these behaviors happen *before* the beginning of the winter. Then there is the important observation that the ladybirds do not change their sites during winter. Of course, it may be that short, cool periods are coming, but if these never sink below -10˚C, then the ladybirds survive. A series of experiments have been made during the last ten years to observe departures from this behavior. It was found that during this period the ladybirds did not make any mistake! Based on the present level of knowledge of meteorology, it is impossible to produce such a long-term weather forecast. This information comes from the book *Ladybirds* (HarperCollins 1994, New Naturalist Series), by Prof. Michael Majerus.[2]

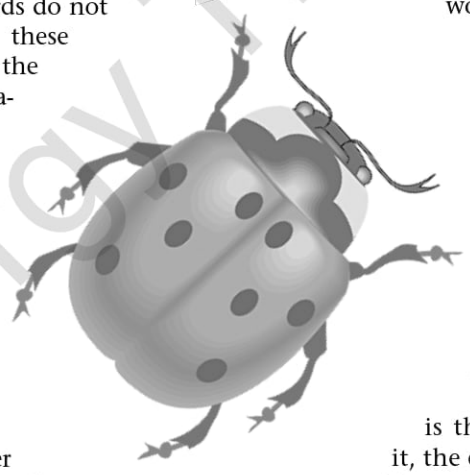

Obviously, ladybirds cannot compute complex differential equation systems to process environmental data such as air pressure, vapor content, temperature, etc. to obtain data for even a short-term forecast. Their neurology system is unable to perform these calculations. So we should look for a physical property in the environment for which: 1) the average value can't change by extremes, 2) the average value changes with a long time period, 3) it can always be found at least at a minimum value (it never disappears), and 4) it is practically constant for large geographical regions (*e.g.* the same value can be found even at distances of 300 km).

There are only two known physical properties that fit these requirements. These are the magnetic field of the Earth and electromagnetic radiation from the Sun.[4] These parameters never disappear. The magnetic field of the Earth can be contorted by the Sun (for example by ion flow from magnetic storms),[3,4] therefore the magnetic field of the Earth can change—not only the spectrum of electromagnetic radiation.

Relation to the Weather

The question is: How can the weather be influenced by the magnetic field of the Earth and its changes and/or electromagnetic radiation and its changes. The solution is provided by another observation. There is special equipment[3] that removes water from an excessively moisture retaining wall of a house. The wetness is due to the capillary phenomenon. This equipment completely displaces the humidity from the wall for a year. The equipment consists of some metal coils which are not permanent magnets; only the magnetic field of the Earth influences them and they obviously modify the magnetic field.

The equipment polarizes part of the electromagnetic radiation of the Sun and changes the magnetic field of Earth (including amplifying it), which deforms the Van der Waals forces (including the hydrogen bonds, too). That's why the water comes out of the wall—by a change of the original capillary phenomenon.

However, this changes: 1) the specific heat of seawater, 2) the freezing-point and melting-point, and 3) evaporation heat (L_p).

Besides the above, it can be useful to examine the effect of the magnetic field and its changes and/or the change of electromagnetic radiation (including changes in spectrum, too) on the following: 4) the viscosity of the water (this would be especially important in cases of the sea currents, *e.g.* the Gulf Stream, and the exchange of the cold-warm layers, respectively), 5) reflection of electromagnetic radiation, 6) in formation of the clouds: which types of clouds develop (*e.g.* the role of the magnetic field in the forming of rain-clouds), and 7) the role of the time factor in the all previous cases, *e.g.* the speed of the evaporation process in case of various magnetic fields, the speed of forming clouds, etc. It should be considered that the sea is the main heat reservoir. Compared to it, the effect of the atmosphere is very small, and in case of the continents the cold and warm layers do not mix.

Propositions

I propose that in all experiments—first of all made with salt water—the effect of the magnetic field generated by *direct current and alternating current* should be examined separately, and the influence of electromagnetic radiation on salt water. The importance of these has not been appreciated.

Conclusions

Through its effect on sea water and forming clouds, the Earth's magnetic field and its changes and/or changes of electromagnetic radiation (including changes in spectrum) could be primarily responsible for the climate and its

New Energy Times Archive

changes, including the humidity and changes in temperature. The magnetic field is altered by the following: 1) the friction of the magma with the Earth layers above, 2) movements of the electric carriers in air currents, including the currents originated from the rotation of the Earth, 3) magnetic domain in rocks, and 4) the magnetic field of the Earth is contorted by the Sun.

Long-time control of the climate

If the Van der Waals forces (including the hydrogen bonds) are influenced by the magnetic field of the Earth, the conclusion is the following:

If the magnetic field results from the friction of the magma and the Earth or magnetic domain in rocks produce the long-term variation of the magnetic field, then the climate cannot be controlled by the usually considered climatic factors. That means that the climate (and so the cold winter) can be determined by only one factor, namely by the magnetic field.

If the change of magnetic field resulted from movements of the electric carriers in air currents (including currents originated from the rotation of the Earth), the climate is controlled by only one factor, namely by the terrestrial magnetic field.

For both cases: by measuring only this one attribute, the effects of all others can be inferred. This can characterize climate (*e.g.*, the cold winter).

Suppose that the magnetic field of the Earth—averaged over days—changes very slowly, therefore monitoring the variations of the averaged values in a certain time interval, we can derive the long-term climate (*e.g.* hard winter, rainy summer, etc.) on the basis of the previous effects. (These may be the effects on the seas mixing cold and warm layers, the specific heat, vapor percentage of the air, which can be changed due to the variation of the evaporation heat, etc.) However, it is possible that we can predict the future value of the magnetic field, if there is such a regularity (*e.g.* periodicity) and from this we could predict the future climate.

If the Van der Waals forces (including the hydrogen bonds) are mainly influenced by the electromagnetic radiation and its change (including its spectrum) the conclusion is the following:

The climate cannot be controlled by the usually considered climatic factors. That means that the climate (and so the cold winter) can be determined by only one factor, namely by the electromagnetic radiation. In such a way the electromagnetic radiation is characteristic for climate (*e.g.* the cold winter).

It is possible that ladybirds measure the magnetic field/electromagnetic radiation on the bases of the capillary phenomenon, since the measuring method in this case is integrative (that means, it eliminates fast changes).

On the bases of the previous it is worth considering that the value and change of the magnetic field/ electromagnetic radiation—possibly the movement of the magnetic poles, too—*is primarily responsible for the global rise or fall of average temperature*.

The author hopes that this paper may be a starting point for supporting experiments and that it initiates a series of articles debating such matters.

References

1. "Supernatural," a BBC documentary series directed by John Downer, 1999.

2. The behavior of ladybirds is described in this book in Chapter 8 (Ladybirds in Winter), pages 160 and 163. The observations were on kidney-spot and orange ladybirds. In pages on "Ladybirds" Prof. Majerus was very surprised but did not try to explain long range weather forecast of these species of ladybirds. Dr. Majerus has accounted for this in the *Sunday Telegraph* (March 21, 1999): "I have absolutely no idea how they do it, but in the eleven years we've looked at it, they have been correct every year. It is now statistically significant that they are not making the wrong choice."

3. www.extra.hu/aquapol-epszig/

4. www.fas.org/spp/military/docops/army/ref_text/chap5im.htm

About the Author

Mr. Wernsdörfer received an M.Sc. in electrical engineering from the Technical University of Budapest (1993). He has worked at numerous companies as a development engineer, and is currently employed as a sales manager for Dedra, an internet provider in Hungary.

*Szarnyas Str. 8/C II/4, Budapest 1107 Hungary;
E-mail: wern@freemail.hu

ORDER THESE POPULAR BOOKS from New Energy Foundation, Inc.

The Homopolar Handbook:

A Definitive Guide to Faraday Disk and N-Machine Technologies

by Thomas Valone
1994, Paperback, 188 pages
$23.95 North America/$28.95 Foreign

The Orgone Accumulator Handbook

by Dr. James DeMeo
1987, Paperback, 162 pages
$15.95/$19.95

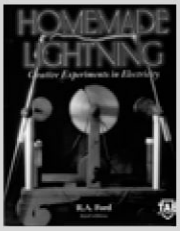

Homemade Lightning

by R.A. Ford
2002, Paperback, 275 pages
$21.95 /$25.95

P.O. Box 2816 • Concord, NH 03302-2816
Phone: 603-485-4700 • Fax: 603-485-4710
www.infinite-energy.com

New Energy Times Archive

Science & Technology Used Book Marketplace

All books are like new unless otherwise specified. See important ordering specifications below.

2081: A Hopeful View of the Human Future
Gerard K. O'Neill, 1981
Hardcover, 286 pp. . .$6.00 + $1.84 Shipping

A Century of Wonders: 100 Years of *Popular Science*
Ernest Heyn, 1972
Hardcover, 320 pp. . .$20.00 + $2.26 Shipping

Collective Electrodynamics: Quantum Foundations of Electromagnetism
Carver A. Mead, 2000
Hardcover, 135 pp. . .$20.00 + $1.42 Shipping

Contact with the Stars: The Search for Extraterrestrial Life
Reinhard Breuer, 1978
Hardcover, 292 pp. . .$10.00 + $1.84 Shipping

The Coattails of God: The Ultimate Spaceflight, Trip to the Stars
Robert M. Powers, 1981
Hardcover, 288 pp. . .$5.00 + $1.84 Shipping

The Cosmic Blueprint: New Discoveries in Nature's Creative Ability to Order the Universe
Paul Davies, 1988
Hardcover, 224 pp. . .$10.00 + $1.84 Shipping

Cosmos
Carl Sagan, 1980
Softcover, 365 pp. . .$10.00 + $2.26 Shipping

Dictionary of Astronomical Terms
Ake Wallenquist, 1966
Softcover (Mass Market), 265 pp. . .$3.00 + $1.42 Shipping

Earth Rising: American Environmentalism in the 21st Century
Philip Shabecoff, 2000
Hardcover, 224 pp. . .$10.00 + $1.84 Shipping

The Emperor's New Mind: Concerning Computers, Minds, and the Laws of Physics
Roger Penrose, 1989
Hardcover, 466 pp. . .$8.00 + $1.84 Shipping

The Ghost in the Atom
P.C.W. Davies and J.R. Brown, eds., 1986
Softcover, 157 pp. . .$9.00 + $1.42 Shipping

Guide to Mars
Patrick Moore, 1977
Hardcover, 124 pp. . .$6.00 + $1.42 Shipping

Interstellar Migration and the Human Experience
Ben R. Finney and Eric M. Jones, eds., 1985
Softcover, 354 pp. . .$8.00 + $1.84 Shipping

The Left Hand of Creation: The Origin and Evolution of the Expanding Universe
John D. Barrow and Joseph Silk, 1983
Hardcover, 256 pp. . .$6.00 + $1.84 Shipping

Living Water: Viktor Schauberger and the Secrets of Natural Energy
Olof Alexandersson, 1976
Softcover, 162 pp. . .$10.00 + $1.42 Shipping

Perry's Chemical Engineers' Handbook (Seventh Edition)
Robert H. Perry and Don W. Green, eds., 1997
Hardcover. . .$60.00 + $3.94 Shipping

Pioneering the Space Frontier
Report of the National Commission on Space, 1986
Softcover, 211 pp.(slight water damage). . .$7.00 + $1.84 Shipping

Pioneering Space: Living on the Next Frontier
James E. Oberg and Alcestis R. Oberg, 1986
Hardcover, 298 pp. . .$7.00 + $1.84 Shipping

The Quest for SS433
David H. Clark, 1985
Hardcover, 206 pp. . .$6.00 + $1.42 Shipping

The Road to the Stars
Iain Nicolson, 1978
Hardcover, 224 pp. . .$6.00 + $1.84 Shipping

The Science in Science Fiction
Peter Nicholls, ed., 1983
Softcover, 208 pp. . .$7.00 + $1.84 Shipping

The Second Coming of Science: An Intimate Report on the New Science
Brian O'Leary, 1993
Softcover, 151 pp. . .$7.00 + $1.42 Shipping

Temperatures Very Low and Very High
Mark W. Zemansky, 1964
Softcover, 127 pp. . .$6.00 + $1.42 Shipping

Toward Distant Suns: Space as the New Frontier
T.A. Heppenheimer, 1979
Softcover, 256 pp. . .$5.00 + $1.84 Shipping

The Unexpected Vista: A Physicists' View of Nature
James S. Trefil, 1983
Hardcover, 209 pp. . .$10.00 + $1.84 Shipping

What's So Funny About Science?
Cartoons by Sidney Harris (from *American Scientist*), 1977
Softcover, 125 pp. . .$6.00 + $1.42 Shipping

World Radio TV Handbook (1983 Edition)
J.M. Frost, ed., 1983
Softcover, 608 pp. . .$3.00 + $1.84 Shipping

- All mail order customers are encouraged to phone us for availability before sending orders.
- Shipping costs apply only to U.S. customers. Non-U.S. customers must call for shipping cost.
- Books shipped within the U.S. will be sent via Media Mail (the rates quoted).
- Credit card orders via phone or fax are encouraged since sales are on a first come, first serve basis.
- These used books are not available on our website.
- In the future, we hope to offer books on consignment from our readers. Watch for details.

New Energy Foundation, Inc. ■ P.O. Box 2816 ■ Concord, NH 03302-2816
Phone: 603-485-4700 ■ Fax: 603-485-4710

New Energy Times Archive

Professional Service Directory

Business Card Advertising
$10.00

Check Out Our Science and Technology Used Books

Numerous used science books available for purchase from the New Energy Foundation. All are in like-new condition unless otherwise noted. Watch for new additions in every issue.

See page 70 for details.

Unique Solid-State Free Energy Info CD-ROM *Systems you can build!*

Other exciting titles available.
http://www.hi-techstuff.com

New Energy Power Systems™ (NEPS)

Providing Consultation on Circuit Design and Operation; Programming to Your Specifications; Circuit and Software Prototyping. Marathon Systems is developer of the Mk12.30 Advanced Power Controller. Provides confidential consultation on operational requirements. Capabilities to design and test prototype circuits. Software programming. To purchase Electronic Controller, contact:

Marathon Systems Enterprises, Inc.
P.O. Box 7743, Gaithersburg, MD 20898

Thirty-five Years Experience in Design and Prototyping

Specializing in solar and alternative energy systems, our services include evaluations, engineering, prototyping, and manufacturing. Our state of the art facility includes CNC machining and CADCAM engineering. Nondisclosure agreements are available upon request.

James Rasmusson • Retronix Inc.
421 East 24th Street • Holland, MI 49423

Retronix@wmol.com

Are you fed up

with unsubstantiated double-talk? Would you like to see a well-substantiated explanation of space, matter, gravity, electromagnetism, light, and time: a logical, comprehensive, consistent, mathematically-substantiated unified theory?

Please write if you are curious, comprehend simple physics and algebra, have a long attention span, and are receptive.

Better Physics (BLI)
PO Box 88
Garden Valley, CA 95633
Website: www.softcom.net/users/greebo/price.htm

http://lenr-canr.org

This vital cold fusion archive has hundreds of technical papers available for download.

PH:203-924-9538 **FAX:203-924-9956**

FREE Gift if you visit OURPAL website
http://www.ourpal.com

E-Mail: PAL@OURPAL.COM
Jail-Mail: 203-924-4271
(AKA Voice-Mail)
Snail-Mail: 7 Woonsocket Ave.
Shelton, CT 06484

Free Inventrepreneurship Kit

OUR PAL(R) ASIJA, MBA, PE, CDP, JD, ATM
AFFORDABLE Intellectual Property Attorney

68,000-Volt DC Power Supply

(Can Be Used to Drive "Lifters")

Has a variable output from 0 to 68KV, line-to-line (+ and -34KV line to ground), at approx. 450 watts max. Three digital meters monitor output voltage to 1% tol. 120-volt AC input. Price: $5,000. Contact:

William Simpson • 600 Meridian Street Ext. #302
Groton, CT 06340 • Phone: 860-405-1157

The Institute for New Energy *an international organization which promotes new and renewable energy sources*

Journal of New Energy (*Hal Fox, Editor*) $150, 4 softbound issues per year — **New Energy News** (*Patrick Bailey, Editor*) Receive 12 issues when you become a member of INE — INE Yearly Memberships: $35 Individuals, $60 Corporations & Libraries

NEN is sent by email only, in PDF and Word file formats. For information, to become a member, or to subscribe contact:

The Institute for New Energy
3084 East 3300 South
Salt Lake City, UT 84109-2154
Phone: 801-466-8680
Website: http://www.padrak.com/ine/

Graphite—High Density

Plates, Sheets and Blocks for Fuel Cells. . .

I specialize in small quantities for the experimenter, research lab, inventor, etc.—40,000 lbs. available! Used for fuel cells, glassblowing, melting metals.

10 lbs. assorted pieces shipped—$99.00
Overseas shipping add $30.00—$129.00

Call: 978-794-0691 / E-mail: gldshot@aol.com
Jim Sciuto • Box 288 • Boxford, MA 01921

NOW IS YOUR CHANCE!

Get the most up-to-date medical research & discover new techniques & protocols in many disciplines of medicine and energy.

Order
Explore! *for the Professional*
for $79.00
(6 issues, including shipping)
or order a sample copy for $7.50. Get a second subscription for your waiting room for only $59.00 (within USA).

Back Issues are STILL available; ask for an info packet for back issue information.

We gladly accept Visa, Master Card & Amex.
Call 800-320-6036 or 928-541-1920.
Fax 928-541-1906
email: info@explorepub.com

318 N. Rush Street,
Prescott AZ 86301

Explore! *for the Professional* is a great gift idea, you will be remembered All Year!

New Energy Times Archive

Contact Infinite Energy Magazine to request a complete catalog:

New Energy Foundation, Inc.
P.O. Box 2816
Concord, NH 03302-2816
Phone: 603-485-4700
Fax: 603-485-4710

http:// www.infinite-energy.com

See products on back cover.

	North America	Foreign
Cold Fusion: Fire From Water, Video	$34.95 ____	$44.95 ____
"Get Up to Speed" Package	$50.00 ____	$70.00 ____
Back Issue Package, Issues #1-#48	$160.00 ____	$300.00 ____
TOTAL:	____	____

— Special Offers Not Available on Our Website —

TO SUBSCRIBE OR RENEW INFINITE ENERGY MAGAZINE COMPLETE INFORMATION BELOW.

Name: _____
Address: _____
Address: _____
City: _____ **State:** _____ **Postal Code/Zip:** _____
Country: _____ **Phone:** _____ **Fax:** _____
If using Credit Card: Check one: MasterCard ____ Visa ____ American Express ____

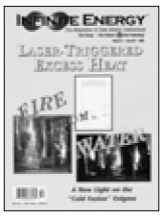

(ISSN 1081-6372)

Card Number: _____
Expiration Date: _____ **Signature:** _____
E-Mail Address: _____

Subscriptions are $29.95 North America/$49.95 Foreign for six issues per year.
Any six single back issues $29.95/$49.95. Single Issues $5.95/$10.00.
Special Double Issues $10.00/$15.00. Price includes shipping.

QUANTITY EIGN	PRODUCT	NORTH AMERICA	PRICE FOR-
	NEW Subscription — Start at Issue No.		
	RENEW Subscription — Start at Issue No.		
	Single Back Issue(s) No.		
	Double Back Issue(s) No.		
	TOTAL		

Infinite Energy Magazine has been in publication since March 1995 and is distributed to U.S. and Canadian newsstands. *Infinite Energy* is circulated around the world in forty countries. Typical press run is 5,000 copies per issue. It is a technical magazine with outreach to the general public as well. To maintain the highest editorial standards, it is written and edited by scientists, engineers, and expert journalists. It is aimed at pioneering scientists, engineers, industrialists, and investors who are entering an exciting R&D area.

Infinite Energy reports on new technology developments and scientific discoveries as they are made, and covers a variety of new science and new energy topics.

New Energy Times Archive